JOB PROGRESS REPORT

State Massachusetts

Cooperator Massachusetts Division of Fisheries and Game

Project No. W-42-R-5 Project Title: Massachusetts Waterfowl Research Program

Job No. IV-1 Job Title: Wood Duck Population Study: Nesting Studies and Brood Survival

Period Covered: 1 April to 15 October 1971

Note: This report is a brief review of the 1971 wood duck nesting study. A five-year detailed analysis of the project findings is in preparation for publication.

Abstract: Wood duck production on Great Meadows National Wildlife Refuge increased slightly for the first time in five years with 50 ducklings being produced from five successful nests.

Duckling production fell on the Suasco sites and in central Massachusetts. Survival of ducklings at Great Meadows was good with over a 50 percent recapture of web-tagged ducklings.

Procedures: Standard nesting study and web-tagging techniques and data collection as described in THE WOOD DUCK IN MASSACHUSETTS (Grice and Rogers, 1965) were employed. Recapture of tagged ducklings was accomplished during midsummer through early fall by various combinations of airboat night-lighting, bait trapping and cannon netting.

Findings: Wood duck production on the Great Meadows National Wildlife Refuge increased for the first time in five years with 50 ducklings being produced from five out of seven nests.

The number of successful nests on Greenough's Estate dropped from four to three, from which 24 ducklings were produced. The three successful hens were first-time, unmarked breeders on the area. The number of successful nests on Estabrook Pond dropped from six to five with 51 ducklings being produced. Four of the successful hens were new nesters including one web-tagged bird from 1970.

Two hens nested successfully on the Buttrick complex, producing 21 ducks. One hen was a new bird.

Publication approved by Alfred C. Holland, State Purchasing Agent #5146

JOB PROGRESS REPORT

State: Massachusetts

Cooperator: Massachusetts Division of Fisheries and Game

Project No. W-42-R-5 Project Title: Massachusetts Waterfowl Research Program

Job No. IV-1 Job Title: Wood Duck Population Study: Nesting Studies and Brood Survival

Period Covered: 1 April to 15 October 1971

Note: This report is a brief review of the 1971 wood duck nesting study. A five-year detailed analysis of the project findings is in preparation for publication.

Abstract: Wood duck production on Great Meadows National Wildlife Refuge increased slightly for the first time in five years with 50 ducklings being produced from five successful nests.

Duckling production fell on the Sudbury sites and in central Massachusetts. Survival of ducklings at Great Meadows was good with over a 50 percent recapture of web-tagged ducklings.

Procedures: Standard nesting study and web-tagging techniques and data collection as described in THE WOOD DUCK IN MASSACHUSETTS (Grice and Rogers, 1965) were employed. Recapture of tagged ducklings was accomplished during midsummer through early fall by various combinations of airboat night-lighting, bait trapping and cannon netting.

Findings: Wood duck production on the Great Meadows National Wildlife Refuge increased for the first time in five years with 50 ducklings being produced from five out of seven nests.

The number of successful nests on Greenough's Estate dropped from four to three, from which 24 ducklings were produced. The three successful hens were first-time, unmarked breeders on the area. The number of successful nests on Batchcock Pond dropped from six to five with 51 ducklings being produced. Four of the successful hens were new nesters including one web-tagged bird from 1970.

Two hens nested successfully on the Burrick complex, producing 11 ducks. One hen was a new bird.

Publication approved by Alfred C. Holland, State Purchasing Agent 65146

Table 1. Wood duck nesting results for Massachusetts study areas, 1971

Area	Number of Available Boxes	Number of Nest Starts	Number of Successful Nests	Number of Ducklings Produced
Great Meadows	61	7	5	50
Greenough Estate	22	4	3	24
Estabrook Pond	11	6	5	51
Buttrick Estate	14	2	2	21
Ayer Game Farm Pond	8	0	0	0
Breeding Pond	22	4	4	49
Chaffin's Pond	7	0	0	0
Fisk Mill Pond	15	12	10	125
Long Pond	12	3	3	33
Nipmuc Pond	14	8	8	78
Spruce Pond	4	0	0	0
Turkey Hill Brook	9	2	2	19
Westboro Management Area	12	0	0	0
Bristol-Blake Complex	34	10	8	118
Totals	245	58	50	568

Twenty-four percent (24%) of boxes were used by wood ducks.

Eighty-six percent (86%) of nest attempts were successful.

Number of ducklings produced per successful nest was 11.4.

Table 1. Wood duck nesting results for Massachusetts study areas, 1971

Area	Number of Available Boxes	Number of Nest Starts	Number of Successful Nests	Number of Ducklings Produced
Great Meadows	61	7	5	50
Greenough Estate	22	4	3	24
Hatchbrook Pond	11	6	5	51
Hutchick Estate	14	2	2	21
Ayer Cane Farm Pond	8	0	0	0
Breedlog Pond	22	4	4	49
Chaffin's Pond	7	0	0	0
Kink Mill Pond	15	12	10	125
Long Pond	12	3	3	33
Nipmuc Pond	14	8	8	72
Spruce Pond	4	0	0	0
Turkey Hill Brook	3	2	2	19
Westboro Management Area	12	0	0	0
Bristol-Blake Complex	34	10	8	118
Totals	245	58	50	558

Twenty-four percent (24%) of boxes were used by wood ducks.

Eighty-six percent (86%) of nest attempts were successful.

Number of ducklings produced per successful nest was 11.6.

Four hundred twenty-two ducklings were produced on the central Massachusetts study areas, down from 597 in 1970 and 439 in 1969. There were 35 successful nests, down ten from 1970. The biggest decline was at Bristol Blake (seven in 1971, 15 in 1970).

A total of 568 ducklings were produced on Massachusetts study areas in 1971. These were the result of 50 successful nests out of 58 attempts. In 1970, 773 ducklings were produced from 62 successful nests out of 70 attempts and in 1969, 719 ducklings were produced from 63 successful nests out of 71 attempts. In 1971, nest attempts were down 17 percent from 1970 and 18 percent from 1969 while duckling production was down 26 and 21 percent from each respective year.

Forty-one of the 50 ducklings hatched at Great Meadows were web-tagged and nine more birds were tagged in a box immediately adjacent to the Meadows. Eleven additional transplanted day-old ducklings were web-tagged. Of the 61 tagged birds, 33 were recaptured and 27 traced to flight stage for a minimal survival rate of 44 percent. This indicates that juvenile wood ducks are not being subjected to any abnormal mortality rates on the refuge.

Recommendations: Web-tagging of ducklings and banding of hens should be continued on the Great Meadows Refuge in conjunction with Federal studies.

Full checks for total egg production should be continued on other areas. Nests should not be cleaned out but left in order to determine what correlation membrane counts taken in the winter have with actual egg production.

Dummy eggs should be placed in nests on selected sites based on an appropriately designed experiment amenable to statistical analysis to determine what effects they may have on nesting activities.

Wood duck production records since 1966 should be analyzed and a publication prepared for the period 1966 through 1971 to allow the dissemination of updated research findings on the status of the wood duck in Massachusetts.

Acknowledgment: I extend my appreciation to Larry Malone and the personnel of the Great Meadows National Wildlife Refuge for their continued cooperation and help in this project.

MASSACHUSETTS DIVISION OF FISHERIES AND GAME
Bureau of Wildlife Research and Management

Approved: _____
Colton H. Bridges, Superintendent

Prepared by: _____
H. W. Heusmann, Waterfowl Biologist

Date: _____

JOB PROGRESS REPORT

State: Massachusetts

Cooperator: Massachusetts Division of Fisheries and Game

Project No.: W-42-R-6 Project Title: Massachusetts Waterfowl Research Program

Job No.: II-1 Job Title: Coastal and Inland Waterfowl Banding (pre-season segment)

Period Covered: 10 April 1972 to 15 October 1972

Summary: A total of 1,393 birds were banded during the 1972 pre-season banding period. The number of birds banded by various techniques is as follows: airboat night-lighting, 838 (30 birds banded with Great Meadows NWR bands); bait trapping, 249; cannon netting, 81; drive-trapping, 126; nest box trapping, 69; miscellaneous, 30.

Species composition for all methods is as follows: mallards, 531; black ducks, 149; mallard x black hybrids, 70; mallard x domestic hybrids, 4; wood ducks, 220; green-winged teal, 137 (30 banded with Great Meadows NWR bands); blue-winged teal, 69; baldpate, 5; hooded merganser, 3; pintail, 1; ruddy duck, 1; common eider, 8; Canada goose, 129; American coot, 32; common gallinule, 16; sora rail, 6; American bittern, 5; black crown night heron, 2; pied-billed grebe, 4; broad-winged hawk, 1.

A total of 161 mallards, 6 black ducks and 19 mallard x black hybrids were banded during the summer phase of the park mallard program.

Objectives: To band a well-distributed sample of coastal and inland waterfowl populations, both preseason and on the wintering grounds in accordance with quotas established by the Banding Committee of the Atlantic Waterfowl Council.

Procedures: Techniques employed to capture waterfowl included the use of airboat and night-lighting equipment described in Report W-42-R-1, Job No. II-1 (1967), by nest box trapping, drive trapping geese, bait trapping and cannon netting.

Findings:

Nest Box Trapping

During nest checks for the wood duck population study, 65 adult female wood ducks, 3 hooded mergansers, and 1 mallard were banded. All the birds were captured while incubating in man-made nest boxes.

Publication approved by Alfred C. Holland, State Purchasing Agent #5146

Bait Trapping

Bait traps were checked by Division personnel a total of ten times on the Great Meadows National Wildlife Refuge during the period 21 August to 5 October 1972. A total of 82 wood ducks, 6 mallards, 22 blacks and 8 mallard x black hybrids were banded. Three returns from previous years and 127 repeats were also trapped. Great Meadows Refuge personnel trapped and banded an additional 44 wood ducks, 4 mallards, 24 black ducks and 4 mallard x black hybrids.

A single floating bait trap was operated on the Westboro Wildlife Management Area between 9 September and 5 October 1972. Thirty-eight mallards, 2 black ducks, and 3 mallard x black hybrids were banded. Nineteen of these birds were recaptured during the trapping period.

Bait traps were operated unsuccessfully by cooperators at Bristol-Blake State Reservation and Broadmoor Audubon Sanctuary.

Airboat Night-Lighting

Despite a poorly running airboat, a record number of waterfowl and marsh birds were banded during the 1972 season (Table 1). Eight hundred and thirty-eight birds were banded and 116 previously banded birds were recaptured. The previous record of 805 new birds was set in 1967, the first year of airboat operation. Table 2 presents success rates for the six years of airboat operation.

Table 2. Airboat Night-Lighting Success

Year	No. of Trips	No. of Birds Banded	Success Rate (Birds Per Trip)
1967	44	805	18.3
1968	26	580	22.3
1969	34	561	16.5
1970	34	577	17.0
1971	17	464	27.3
1972	20	838	41.9

High water levels during the 1972 season compensated in part for the lack of power in the airboat. Success at the Great Meadows National Wildlife Refuge was exceptionally high on two trips but low on two other trips. On the last trip to Great Meadows a combination of die-off of the lotus beds and increased water levels which flooded secluded potholes allowed many waterfowl to roost in areas inaccessible to the airboat.

Table 1. Airboat Launchings and Species Captured, Summer 1972.

Location	Date	Mallard	Black Duck	Mallard x Black	Wood Duck	Blue-Winged Teal	Green-Winged Teal	Baldpate	Other Ducks	Mallard x Domes.	American Coot	Common Gallinule	Sora Rail	American Bittern	Misc. Birds	Returns	Repeats	Totals
Concord River, Bedford	7/31/72	23	8	2	1	4				1								39
Broad Meadows, Sudbury	8/01/72		3	1									2	2				8
Chicopee River, Chicopee	8/02/72	18				1								1				20
Norumbega Park, Newton	8/07/72	16	1													5		22
Concord River, Bedford	8/08/72	17	11		1								1			2	16	48
Broad Meadows, Sudbury	8/11/72	42	10	3	1		1											57
Chicopee River, Chicopee	8/15/72	7															3	10
Stop and Charles Rivers, Medford	8/16/72	14	7	1	1													23
Concord River, Bedford	8/17/72				1							1	1	1			3	7
Broad Meadows, Sudbury	8/22/72	8	5											1			5	19
Broad Meadows, Sudbury	8/31/72	29	13	1	4	2						1					8	58
Great Meadows NWR, Concord	9/01/72	31	8	6	5	3	3					2			1[3]	2	3	64
Chicopee River, Chicopee	9/07/72	3	1	8	1	2											2	17
Great Meadows NWR, Concord	9/29/72	42	21	6	16	37	59*	4	1[1]		1	5				5	22	219
Ipswich River, Topsfield	10/2/72	2	5		13	9	5				1	1				1		37
Fisherville Pond, Grafton	10/3/72	36	4	5	8		8						1					62
Great Meadows NWR, Concord	10/6/72	33	17	2	20	7	58	1	1[2]	1	8	6				7	21	182
Ipswich River, Topsfield	10/12/72		3		1	4	1			1	19				2[4]		2	33
Great Meadows NWR, Concord	10/13/72	5	2	3			2			1	3		1		3[3-4]		9	29
		326	119	38	73	69	137	5	2	4	32	16	6	5	6	22	94	954

* 30 banded with Great Meadows NWR bands
[1] Pintail
[2] Ruddy Duck
[3] Black Crowned Night Heron
[4] Pied Billed Grebe (2)

Goose Banding

A total of 126 Canada geese were banded in conjunction with the gosling transplant study (W-42-R-6, Job V-1). Twenty-six goslings were transplanted from eastern to western Massachusetts.

Miscellaneous Bandings

Eight common eider, captured as oil-soaked birds in Maine, held and treated by Philip Stanton of Upton, Massachusetts, were banded and released on Duxbury Bay on 14 September 1972.

Three adult male Canada geese, 15 mallards, 1 black duck and 2 mallard x black hybrids were banded as part of a National Hunting and Fishing Day bird banding demonstration. These birds were living as free-flying waterfowl on the Sandwich Game Farm and were transported to Westboro, banded and released.

One adult male broad-winged hawk was found injured, treated for gunshot wounds, held until flying, banded and released on the Swift River Wildlife Management Area, Belchertown by Assistant Aquatic Biologist Joseph Bergin.

Park Mallard Program

Park mallards were banded at Forest Park, Springfield; Horn Pond, Woburn; Norumbega Park, Newton; and Mill Pond, Winchester. A single cannon net shot at Horn Pond on 31 August resulted in the banding of 41 mallards, 1 black and 3 mallard x black hybrids and the recapture of five previously-banded ducks.

Twelve mallards were banded after a cannon net shot at Forest Park on 9 September and 24 more on 27 September. Seven returns were recorded.

Sixteen mallards, 1 black duck and 5 return birds were captured night-lighting at Norumbega Park, 7 August. Thirty-five additional mallards, 4 blacks and 12 mallard x black hybrids were banded bait trapping between 24 August and 19 September on the same site. The age ratio for bait trapped mallards was 1:4.6 adults to immatures. This compares with 1:3.7 in 1971 and 1:2.9 in 1970.

A walk-in bait trap at Mill Pond, led to the capture of 33 mallards and 4 mallard x black hybrids plus 27 previously banded birds (two of which were from Horn Pond).

In summary 161 mallards, 6 black ducks and 19 mallard x black hybrids were banded during the 1972 summer park mallard program.

Recommendations: Banding should be continued on a statewide basis, with efforts concentrated during the midsummer to early fall period. The present airboat engine should be replaced or rebuilt to improve operational power thus allowing a broader scope of activity. Banding of incidental marsh species should be continued when time and conditions permit.

Acknowledgments: Personnel of the waterfowl project extend their appreciation to Messrs. Larry Malone and Berlin Heck of the Great Meadows National Wildlife Refuge for their contribution to the banding efforts at the refuge. We also wish to thank Mr. and Mrs. Charles Thomas of Bristol-Blake Audubon Sanctuary, Mr. Bruce Lund of Broadmoor Audubon Sanctuary, and Mr. Richard Mailey of Ipswich River Audubon Sanctuary for their cooperation.

MASSACHUSETTS DIVISION OF FISHERIES AND GAME
Bureau of Wildlife Research and Management

Approved _____
Colton H. Bridges, Superintendent

Prepared by _____
H. W. Heusmann, Waterfowl Biologist

Date _____

JOB PROGRESS REPORT

State: Massachusetts

Cooperator: Massachusetts Division of Fisheries and Game

Project No.: W-42-R-6 Project Title: Massachusetts Waterfowl Research Program

Job No.: III-1 Job Title: Characteristics of the Massachusetts Waterfowl Harvest

Period Covered: 15 January 1972 to 14 January 1973

Abstract: Harvest data for the first zoned waterfowl season in Massachusetts was analyzed. Total harvest declined 32 percent compared to the 1970 harvest, and was 14 percent lower than the Atlantic Flyway decrease in harvest of 18 percent. The decline in harvest of four major species was: black duck, 50 percent; mallard, 31 percent; wood duck, 9 percent; green-winged teal, 59 percent. A significant increase in the proportion of sea ducks in the harvest was noted. Most of the sea duck harvest occurred outside the regular waterfowl season.

No significant shifts of inland gunners to the coast during the coastal zone season was noted as compared to previous straight season and split season years. Hunters were most successful in their zone of residence, but coastal zone hunters showed a 15 percent decline in rate of harvest (3.32 birds per hunter in 1971; 3.89 birds per hunter in 1970). More than half the total harvest occurred in the first two weeks of the season, but the effect of two opening days (one per zone) was less than opening day harvests observed under past straight seasons or split seasons with both opening harvests of the split season summed.

Hunter opposition to the zoned season was voiced by some coastal gunners who prefer late October shooting. Inland gunners accustomed to late December shooting on open river waters expressed discontent with the late November closure of the inland zone season.

Objectives: To evaluate the characteristics of the Massachusetts waterfowl harvest using band recovery data, wing collection data and hunter questionnaire data so that recommendations relative to hunting regulations (particularly zoning regulations), season dates and species management can be made based on the best available information.

Background: Massachusetts responded to the Bureau of Sport Fisheries and Wildlife request for backup data relative to zoning proposals by analyzing harvest data for the years 1966, 1968 and 1969. In 1971, the Bureau granted Massachusetts a zoned season

Publication approved by Alfred C. Holland, State Purchasing Agent #5146

with the proviso that a detailed harvest analysis be conducted by the Division of Fisheries and Game.

Procedures: Band recovery data, wing survey data and hunter questionnaire data were analyzed to determine waterfowl harvest rates by species, chronology and species composition of the harvest by regions within the state, success rates of hunters by regions within the state, and the degree of hunter activity within and across various regions of the state.

Findings: The attached zoning harvest report presents the findings of the 1971 Massachusetts zoned waterfowl season.

Recommendations: Harvest data should be analyzed for the 1972 and 1973 zoned seasons. Comparisons between years should be made with particular attention being given to changes in the degree of interchange between zones by hunters as they become more familiar with the zoning regulations.

MASSACHUSETTS DIVISION OF FISHERIES AND GAME
Bureau of Wildlife Research and Management

Approved: _____
Colton H. Bridges, Superintendent

Prepared by _____
Warren W. Blandin
Chief of Wildlife Research

Date _____

JOB PROGRESS REPORT

State: Massachusetts

Cooperator: Massachusetts Division of Fisheries and Game

Project No.: W-42-R-6 Project Title: Massachusetts Waterfowl Research Program

Job No. IV-1 Job Title: Wood Duck Population Study: Nesting Studies and Brood Survival

Period Covered: 1 April to 15 October 1972

Note: This report is a brief review of the 1972 wood duck nesting study. A detailed analysis of recent project findings is in preparation for publication. This report completes this segment of the Wood Duck Population Study.

Abstract: Wood duck production on Great Meadows National Wildlife Refuge increased slightly for the second year with 60 ducklings being produced from five successful nests. Production was significantly up on the adjoining Concord River with 18 nest attempts in 1972 versus 10 in 1971. Production was up on the Suasco Watershed areas with 108 ducklings produced from 11 successful nests out of 14 attempts.

Central Massachusetts production was down with 372 ducklings produced from 30 successful nests out of 36 attempts.

Procedures: Standard nesting study and web-tagging techniques and data collection as described in the Wood Duck in Massachusetts (Grice and Rogers 1965) were employed. Recapture of tagged ducklings during late summer and early fall was accomplished by a combination of airboat night-lighting, bait trapping and cannon netting.

Findings:

Wood Duck Production

Wood duck production on the Great Meadows National Wildlife Refuge increased slightly in 1972. Five successful nests from eight attempts produced 60 ducklings. One unsuccessful nest involved a hen that apparently laid no eggs but still incubated the empty nest. Fourteen eggs from game-farm stock were placed in the nest and the hen successfully hatched 13 ducklings despite the necessary prolonged nest attendance. These ducklings are not included in the 60 total. One of 10 web-tagged ducklings from this clutch was traced to flight stage.

Publication approved by Alfred C. Holland, State Purchasing Agent #5146

Production on the Suasco Watershed study areas was up slightly over 1971 with 108 ducklings being produced from 11 successful nests out of 14 attempts. Raccoon predation was responsible for nest destruction in two Estabrook boxes. A small raccoon was able to gain entrance through the tunnel predator guard. In one case the hen possibly was killed.

Production was down on central Massachusetts study areas. Three hundred seventy-two ducklings were produced from 30 successful nests out of 36 attempts. This was down from the five-year high reached in 1970 when 597 ducklings were produced from 51 nest attempts. A second small raccoon was responsible for killing three hooded mergansers and two wood ducks and destroying a third wood duck nests at Nipmuc Pond despite predator guards. This combined with a raccoon-killed hen at Bristol-Blake and four hens reported shot the previous season undoubtedly influenced the production decline.

On a statewide basis, exceptionally high water conditions may have flooded out nests in low boxes and adversely affected brood survival. Several late broods of wood ducks and other species were observed during summer banding work and Great Meadows National Wildlife Refuge personnel reported several late nests on the Concord River after Division nest checks were curtailed. These late nests may have been the result of hens renesting after brood loss due to spring flood conditions.

Raccoon predation was also high. At least 22 nests were destroyed by raccoons with several hens being killed. In most cases improper predator guards or lack of predator guards allowed the destruction.

Efforts to recapture web-tagged ducklings were limited during 1972. As a result only 14 out of 72 ducklings web-tagged in the vicinity of Great Meadows were recaptured. High water levels may have limited brood survival but lack of comparable trapping effort data from past years precludes comparison.

Game-Farm Wood Ducks

Twenty-two ducklings were reared to flight stage from eggs produced by a flock of four male and six female wild-trapped wood ducks. These birds will hopefully supply eggs for future studies involving dump nesting and its effect on wood duck productivity. Ducklings will also be raised and "imprinted" to starlingproof nesting cylinders and released on areas of low or no cylinder usage. Production will be carried out in conjunction with Project W-42-R, Job VII-2, Black Duck Imprinting Study.

Table 1. Wood Duck Nesting Results for Massachusetts Study Areas, 1972

Area	Number of Available Boxes	Number of Nest Starts	Number of Successful Nests	Number of Ducklings Produced
Great Meadows	53	8	5	60
Greenough Estate	22	5	4	32
Estabrook Pond	11	6	4	45
Buttrick Estate	16	3	3	31
Ayer Game Farm Pond	6	0	0	0
Breeding Pond	22	10	7	82
Chaffins Pond	8	0	0	0
Fisk Mill Pond	16	7	7	104
Long Pond*	12	3	3	3
Nipmuc Pond	14	4[1]	1	6
Spruce Pond	3	0	0	0
Turkey Hill Brook	10	2	2	26
Westboro Management Area	12	0	0	0
Bristol-Blake Complex	34	12	10	121
Totals	239	60	46	510

* Includes nearby Muddy Pond

[1] Three additional hooded merganser nests

Twenty-five percent (25%) of boxes were used.
Seventy-seven percent (77%) of nest attempts were successful.
Number of ducklings produced per nest was 11.1.

Recommendations: Terminate this segment of the wood duck nesting study and compile and analyze the last seven years of production data.

Prepare a monograph updating previous Massachusetts wood duck publications.

Place artificial wood duck eggs in nest boxes in order to determine if presence of eggs in the box affects box usage (dump nesting).

Add game farm eggs to normal size nests to measure survival of extra large broods.

Assuming substantial game farm production, release imprinted ducklings on areas having cylinder-type nesting structures to expedite the use of such structures by wild-hatched wood ducks.

Acknowledgments: I extend my appreciation to Messrs. Larry Malone and Berlin Heck and the personnel at the Great Meadows National Wildlife Refuge for their contribution to this project.

MASSACHUSETTS DIVISION OF FISHERIES AND GAME
Bureau of Wildlife Research and Management

Approved: _____
Colton H. Bridges, Superintendent

Prepared by _____
H. W. Heusmann, Waterfowl Biologist

Date _____

JOB PROGRESS REPORT

State: Massachusetts

Cooperator: Massachusetts Division of Fisheries and Game

Project No.: W-42-R-6 Project Title: Massachusetts Waterfowl Research Program

Job No.: III-2 Job Title: Black Duck Population Study

Period Covered: 15 January 1972 to 14 January 1973

Summary: Three days were spent at the Migratory Bird Populations Station reviewing techniques being used in their mallard population dynamics study. Available computer programs were reviewed. Data tapes received from the Bird Banding Laboratory were duplicated and data extraction was begun. An extensive literature review was completed covering materials dealing with population dynamics, population genetics and ecological simulation systems.

An initial simulation model of a northeastern black duck population was developed and is being tested.

Objectives: To analyze banding data, wing survey data and hunter questionnaire data relative to the continental black duck population with primary emphasis on reproductive rates, mortality rates, differential vulnerability, refinement of reference areas of harvest derivation, breeding reference areas and winter reference areas of banding and the effect of hunting regulations on mortality rates.

Background: Black duck banding data have been analyzed for the period 1946-1960 (Geis, et al, 1971). Banding efforts during the period studied were sporadic. Continuity of banding at a given station over a period of years was not common except for a few major banding stations, and many portions of the black duck's range were not included in the banded sample. Therefore, the available data did not permit detailed analysis of reproductive rates, age ratios in the harvest, and differential vulnerability of sex and age classes.

A major development resulting from the early findings of the black duck investigation was the initiation in 1965 of the Cooperative Banding Program, a joint effort between the United States and Canada to systematize and improve upon the banded samples of waterfowl on the Canadian breeding grounds. As a result, banded samples for black duck since 1965 have been more adequately distributed throughout the black duck's breeding range. (although some black duck sub-populations still are not represented in the banded sample). Banding effort has been more intensive, more consistent with

Publication approved by Alfred C. Holland, State Purchasing Agent #5146

respect to the stations operated, and recovery data has been "condensed" within a shorter time span. Black duck bandings since 1965 have totaled 77,000. Recoveries since 1960 total 28,700. This compares with a total of about 40,000 recoveries over a 15-year span in the previous black duck study.

Procedures: Black duck banding and recovery data, wing collection data and hunter questionnaire data will be supplied on tapes by the Migratory Bird Populations Station and the Bird Banding Laboratory, both located in Laurel, Maryland. Computer analysis will be done on an RCA 70/46 located at Worcester Polytechnic Institute, and an IBM 1130 located at Clark University, Worcester, Massachusetts. Several programs have been supplied by the Migratory Bird Populations Station and one also from E. Frank Bowers, a graduate student at Louisiana State University, Baton Rouge, Louisiana. Additional programs have been developed by the project leader as an integral part of the data analysis. The services of a programmer are available as needed, both at Worcester Polytechnic Institute and at Clark University.

Initially, breeding reference areas as defined in the black duck report (Geis, et al, Ibid.) have been used to extract data relative to survival rates of black ducks. Breeding reference areas and wintering reference areas will be refined if the new data warrant such changes. Survival rates will be developed using methods described by Seber (1970). Annual variations in the distribution of harvest will be evaluated using Chi-square analysis. Differential vulnerability of sex and age classes will be analyzed by combining the use of banding data with bias-corrected wing survey data. Should the data prove adequate, survival rate comparisons will be made between refuge banded and non-refuge banded birds using Chi-square analysis.

Findings: Printouts have been obtained providing information on black duck recoveries for each banding station by quarter-degree blocks. A computer program has been developed to extract harvest data for each banding station by sex and age classification on a breeding reference area basis. The adult banding and recovery data will be used in the Seber model to estimate adult black duck survival rates on an annual basis.

A simulation model describing an eastern Canada black duck population that winters along coastal New England has been developed and is in the process of computer implementation. The model is extremely simple, but will be expanded to include more breeding and harvest areas as the simulation problems are worked out. Should a workable model be developed, one major use for it will be to test the effect of various regulatory changes on black duck survival rates.

A literature review of population mathematics, population genetics, and simulation modeling techniques preceded the work described above, but is a continuing phase of the black duck study.

Recommendations: Data output by the Seber model should be used to evaluate survival between various subpopulations and to evaluate the validity of present breeding reference area boundaries. Studies on differential vulnerability should be undertaken in the next project segment. Comparisons should be made between the survival rates of the present study with those of the black duck report.

Acknowledgments: The project leader extends his thanks and appreciation for assistance to the following persons at the Migratory Bird Populations Station: Aelred Geis, David Anderson, Dick Pospahola, and Charles Henny. Also thanks to Al Johanneson of the Worcester Polytechnic Institute computer center for programming assistance.

MASSACHUSETTS DIVISION OF FISHERIES AND GAME
Bureau of Wildlife Research and Management

Approved: _____
Colton H. Bridges
Superintendent

Prepared by _____
Warren W. Blandin
Chief of Wildlife Research

Date _____

JOB PROGRESS REPORT

State: Massachusetts

Cooperator: Massachusetts Division of Fisheries and Game

Project No.: W-42-R-6 Project Title: Massachusetts Waterfowl Research Program

Job No. IV-2 Job Title: Wood Duck Population Study: Evaluation of Starlingproof Nest Boxes

Period Covered: 1 April 1972 to 14 July 1972

Summary: Wood ducks successfully nested in eleven out of 68 available starlingproof boxes that were distributed across Massachusetts. One hooded merganser also nested successfully. A total of 101 wood ducks and twelve hooded mergansers were produced. Boxes were used at six of nineteen possible sites.

Objectives: To collect comparative data on wood duck production, mortality, recruitment and nest box acceptance from several study areas in the state and to translate this information into sound wood duck management recommendations.

Procedures: Elevated starlingproof nesting cylinders were checked at intervals varying from one to four weeks throughout the nesting season. Incubating hens were banded and young hatched in the boxes were web tagged for future identification.

Findings: Utilization of starlingproof cylinders increased again in 1972 with thirteen nest starts and twelve successful nests. A total of 101 wood ducklings and twelve hooded mergansers were hatched from 110 wood duck and twelve merganser eggs. One wood duck at Meadow Lea attended a nest with no eggs (Table 1).

Nesting activities have increased in the last three years (five successful nests on three sites in 1970; nine successful nests on four sites in 1971; and twelve successful nests on six sites in 1972).

Of ten incubating females handled, none were web tagged or previously banded. Sixty-one of 101 wood ducks hatched in 1972 were web tagged.

No starlings were observed nesting in experimental boxes although several grackle nests were found.

Table 1. Experimental Wood Duck Box Usage in Massachusetts.

Area	Town	Number of Boxes			Nesting Attempts			Successful Nests		
		1970	1971	1972	1970	1971	1972	1970	1971	1972
Onota Lake	Pittsfield	5	5	5	0	0	0	0	0	0
Cheshire Reservoir	Cheshire	10	10	10	0	0	0	0	0	0
Atwood Bog Reservoir	Carver	3	3	3	0	0	1	0	0	1
Mazzella's Reservoir	Carver	3	3	3	0	*	0	0	*	0
Great Cedar Swamp	Hanson	3	3	3	0	1	0	0	1	0
Kaplousky's Reservoir	Duxbury	3	4	4	1	1	3	1	1	3
Meadow Lea Bog	Easton	3	6	9	2	5**	5**	2	4**	4**
Cutting's Pond	Stow	1	1	1	0	0	0	0	0	0
Squannacook River	Groton	3	3	3	0	0	0	0	0	0
Bristol-Blake Sanctuary	Norfolk	2	2	2	0	0	0	0	0	0
Grist Mill Pond	Concord	1	1	1	0	0	0	0	0	0
Mill Pond	Littleton	1	1	1	0	0	1	0	0	1
Beaver Brook	Littleton	5	5	5	0	0	2	0	0	2
Zanders Pond	Stow	1	1	1	0	0	0	0	0	0
Fisk Mill Pond	Milford	3	3	5	3	3	1	2	3	1
Long Pond	Rutland	3	3	3	0	0	0	0	0	0
Chaffin's Pond	Holden	3	3	3	0	0	0	0	0	0
Westboro Area	Westboro	3	3	3	0	0	0	0	0	0
Cunningham Pond	Hubbardston	3	3	3	0	0	0	0	0	0
		59	63	68	6	10**	13**	5	9	12

* One sparrow hawk nest
** One hooded merganser nest

Recommendations: Continue checking starlingproof boxes for brood production and attempt to band nesting females and web tag ducklings in order to determine return and recruitment of these birds to experimental boxes. Erect additional boxes on those areas used in 1971 so that there will be two boxes available for every 1972 nest attempt.

MASSACHUSETTS DIVISION OF FISHERIES AND GAME
Bureau of Wildlife Research and Management

Approved: _____
Colton H. Bridges
Superintendent

Prepared by _____
H. W. Heusmann
Waterfowl Biologist

Date _____

PERFORMANCE REPORT

PERFORMANCE REPORT

State: Massachusetts

Cooperator: Massachusetts Division of Fisheries and Game

Project No.: W-42-R-6 Project Title: Massachusetts Waterfowl Research Program

Job No.: V-1 Job Title: Gosling Transplant Study

Period Covered: 1 April 1973 to 31 July 1973

Summary: Fifty-seven Canada goose goslings were transplanted to four sites during 1973: eight to Oakham, eight to Savoy, eight to Plainfield and 33 to Chester. Fifty-one adult geese and one yearling were banded and released on the capture site; 31 previously banded geese were also captured.

Five previously transplanted geese were observed on four sites but no known broods of transplanted geese were definitely identified. One new report of transplanted geese nesting in 1972 at White Lily Pond was obtained from a cooperator.

Analysis of recovery data indicates a 24.3 percent recovery rate for all geese transplanted since 1967. Approximately half were harvested out of state.

Objectives: To capture geese from locations where populations are large and increasing and to transport and release them in areas of suitable habitat where there is a possibility of developing a harvestable population.

To develop techniques applicable at release sites which will induce geese to accept these release sites as permanent breeding grounds.

Techniques Used: Observations were made during June on several reservoirs and aqueducts in the Framingham-Southboro area to locate concentrations of geese. Three drives were made in this region. All employed the use of canoes manned by one or two personnel, plus several men on foot. Geese were driven along a net into a holding area at one site and along a fence into a corner created by the fence and a building at the second.

All geese captured were aged, sexed and banded if not a return or foreign recovery.

Publication approved by Alfred C. Holland, State Purchasing Agent #5146

Transplanted birds were color-marked with orange and black plastic leg bands and with numbered orange plastic neck collars. Weights and morphological measurements were taken on adult geese captured on the study areas.

Findings: The pretrapping Framingham-Southboro goose census indicated that 191 geese (including goslings) were present during June of 1973. This compares with counts of 187 for 1972 and 159 for 1971.

A late-spring check of a major Framingham Reservoir nesting island revealed only seven nests in 1973. This compares with 16 nests recorded in 1972 and 13 each year during 1968, 1969 and 1971. Three of the seven 1973 nests were destroyed by predators.

The first gosling drive (15 June) involved two broods of nuisance geese in Carlisle, Massachusetts. All eight goslings involved and four of six adults were captured. The adults were banded and released and the goslings were transported to Adam's Pond, Oakham and released.

The second drive at the Fay School, Southboro, was made 21 June and resulted in the capture of 14 goslings, one yearling and 51 adult Canada geese. Fourteen of the adults were previously banded. The goslings were transplanted to Burnett Pond, Savoy State Forest. Six of the 14 wandered off Burnett Pond to North Pond where they were reported fouling a beach. All six of these were recaptured and moved to Littleville Dam, Chester.

A third drive was made 26 June at Framingham Reservoir No. 1. Nineteen goslings and two adults (both returns) were captured. The goslings were released at Crooked Pond, Plainfield. Fourteen of these later moved to nearby Windsor Pond where they were considered a nuisance. Eleven were recaptured and moved to Littleville Dam, Chester.

A second drive was made at Framingham on 27 June. Sixteen goslings and 25 adult Canada geese were captured. Fifteen of the adults were previously banded. The goslings were released at Littleville Dam, Chester.

As of 1 August, only one of the transplanted geese is known to have lost its neck collar.

Nesting Activities. Several checks of gosling transplant sites and nearby ponds were made during the spring of 1973. Breeding geese were observed on a number of areas but few observations were made of color-marked birds. This is the primary reason that colored neck bands were used on the goslings this year.

A pair of geese, of which one was banded, was reported 10 April near Leighton Road, Petersham. A partial band reading indicated the goose was a transplanted bird from Framingham that was released in South Athol. Earlier (3/17/73), a transplanted goose had been killed by an unknown predator in the same area. Two other geese were observed 10 April at Morgan Memorial Pond, South Athol. One of these was orange banded. A postal employee reported a pair of geese raised young on the area last year but made no observations of colored leg bands.

Lou Hambly, Aquatic Biologist, reported finding a goose carcass with an orange band on the leg, but without the standard Federal band. The bird was dead on an island where geese nested in 1972. Hambly reported the goose had apparently been shot with a small caliber rifle. There were no other observations of nesting geese within the Quabbin boundaries.

Six geese were observed on White Lily Pond, Otis. None were banded but a color-banded hen nested successfully on the pond in both 1971 and 1972.

A single unbanded goose was observed on Watson Pond, Otis. A pair of geese, both of which were color leg banded raised seven young on the area in 1971.

A pair of geese were also observed on a small pond off Sandisfield Road in New Marlborough; one was orange leg banded. Win Saville, Western District Game Manager, reported three broods of geese on Thousand Acre Swamp, New Marlborough, but made no observations of colored leg bands since all the adults were swimming.

Recovery Data: A total of 66 of the 272 goslings transplanted between 1967 and 1972 were reported dead as of 31 July 1973. The direct recovery rate (without correction for non-reporting of bands) for goslings released during the years 1967 to 1972 was 15.1 percent. The indirect recovery rate for the transplanted geese was 9.2.

Little banding of non-transplanted birds occurred until 1969; however, 241 goslings, yearlings and adult geese were banded between 1969 and 1972. The total recovery rate for these birds during this period was 15.8 percent. The total recovery rate of transplanted goslings for the same period was 35.0 percent. No attempt was made to determine direct and indirect recovery rates on an annual basis due to small sample size.

Juvenile vulnerability to gunning pressures is probably responsible for much of the difference in recovery rates noted above. However, the migrational patterns of the geese also play an important role. The breeding flocks from which transplanted geese are removed are only semi-migratory. Many birds winter within a few miles of where they nest. This is evident from the fact that only 8 percent of the non-transplanted geese harvested during 1969 to 1972 were taken out of state. In contrast, the transplanted birds are forced to migrate since the release sites in central and western Massachusetts are subject to freezing over during winter months. As a result, 51 percent of the transplanted geese harvested between 1969 and 1972 were taken out of state.

This means that many of the non-transplanted geese spend the winter in eastern Massachusetts towns that are closed to, or limit hunting, while the transplanted birds may be exposed to the gunning pressure of several states as they migrate south.

Recommendations: This project should be continued in 1974 with the removal of goslings from the Framingham-Southboro flocks as production permits. Advantage should be taken of nuisance goose reports to remove preflight goslings from other areas. Since gosling production has steadily fallen off in the Southboro flock, other reservoirs in eastern Massachusetts should be scouted for large breeding flocks of geese that may reach nuisance levels in the near future.

Field observations for nesting transplanted geese should be continued with several checks made in the vicinity of each transplant site. Local residents should be contacted at each site since the colored neck collars should attract attention and aid in identifying transplanted geese.

MASSACHUSETTS DIVISION OF FISHERIES AND GAME
Bureau of Wildlife Research and Management

Approved: _____
Colton H. Bridges
Superintendent

Prepared by: _____
H. W. Heusmann
Waterfowl Biologist

Date _____

PROGRESS REPORT

State: Massachusetts

Cooperator: Massachusetts Division of Fisheries and Game

Project No.: W-42-R-6 Project Title: Massachusetts Waterfowl Research Program

Job No.: VI-1 Job Title: Waterfowl Inventory Flights

Period Covered: 15 November 1972 to 9 January 1973

Summary: Winter inventory flights were made on 9-10 January 1973. Coastal Massachusetts from the New Hampshire to Rhode Island line was surveyed. The total waterfowl count of 79,687 was down 38 percent from 1972, 40 percent from the ten-year average. Black ducks were down 22 percent from 1972, 16 percent from the ten-year average. Scaup, sea ducks, and Canada geese were also down. Bufflehead were up and goldeneye remained unchanged from both 1972 and the ten-year average.

A November flight prior to the opening of the coastal gunning season revealed a build-up of puddle and diving ducks as well as Canada geese above the population levels normally observed during November flights in past years.

Objectives: To inventory waterfowl populations throughout the fall and winter months and in conjunction with special or experimental waterfowl seasons.

Procedures: Two Cessna 172 aircraft were used to inventory waterfowl along coastal Massachusetts including Cape Cod and the Islands. Each aircraft was manned by a commercial pilot, a recorder and two observers. Data were tabulated by species and zones. Weather conditions, flight problems and visibility factors were recorded for each flight. The winter inventory data were submitted on standard forms to the Bureau of Sport Fisheries and Wildlife. Flights were made on 16-17 November 1972 and 9-10 January 1973.

Findings:

Winter Inventory Flight

The weather prior to the winter inventory flight was unseasonably cold with temperatures dropping below zero at night. As a result all creeks and small rivers were frozen over. Ninety-eight percent of all marshes were frozen, 40 to 70 percent of large rivers were frozen and 30 to 70 percent of the harbors were frozen. Bays were mostly open.

Publication approved by Alfred C. Holland, State Purchasing Agent #5146

The species, numbers and location of waterfowl observed during the five-year period from 1969 through 1973 are presented in Table 1. A total of 79,687 waterfowl were observed. This compares with previous figures of 131,364 in 1972, an exceptionally mild winter; 52,290 in 1971, an exceptionally severe winter; 109,720 in 1970 and 120,540 in 1969.

Table 2 presents data on the population change from 1972 and from the previous ten-year average. Total waterfowl populations for coastal Massachusetts were down 38 percent from 1972 and 40 percent from the ten-year average. Black ducks were down 22 percent from last year and 16 percent from previous years. Scaup populations were down significantly also as were sea ducks and Canada geese. The major decline in the sea duck (scoter, eider, old squaw) population was due to a scarcity of scoters.

Goldeneye and bufflehead populations were up, especially the latter. Mergansers were up as were mallards, but mallards are relatively unimportant on the coast and many are undoubtedly included in the count as black ducks. Inland, several thousand mallards winter in park situations but are not included in this count. The canvasback is an interesting duck in view of its scarcity in the Atlantic Flyway and elsewhere. Ground observations indicate that 600 to 800 of these birds overwinter in Massachusetts with populations on the islands, Cape Cod and in Taunton, Massachusetts. Several hundred freshwater coot also winter on inland sites.

Mid-November Flight

During 1969 and 1970, the Massachusetts waterfowl season opened statewide October 20. During 1971 and 1972 the state experimented with a zoned waterfowl season and coastal areas were not open to hunting until after the November flights. The resultant buildup in black ducks was particularly evident in 1971, less so in 1972. A buildup in geese is also apparent with the zoned waterfowl season. Diving ducks are less affected although a small buildup is evident in the goldeneye population. This does not hold true for buffleheads, a less gregarious species. Scaup populations also show no reflection of hunting pressure but this species moves through Massachusetts in extremely large flocks and counts have been traditionally erratic throughout the year in past seasons.

The sea duck season opens annually in September and the birds are only slightly affected by the opening of the regular waterfowl season due to their open water tendencies (Table 3).

Table 1. Winter Inventory - New Hampshire Line to Cape Cod Canal, January 1973

Area	Year	Mallard	Black Duck	Scaup	Goldeneye	Bufflehead	Old Squaw	Scoter	Eider	Merganser	Canada Goose	Brant	Miscellaneous	Total
Salisbury to	1969	15	10,110	3,870	750			82			179			15,006
Wingaersheek Beach	1970		1,433	950	355	480		58			212			3,494
	1971	35	1,742	40	204	5	3	1,325	125		180			3,656
	1972	130	4,862	60	55	90		1,400	1,800		360			8,837
	1973	10	5,035	330	1,510				1,350		310			8,545
Cape Ann to	1969		1,316		319			326	55		13			2,029
Gloucester Harbor	1970		3,918	10	335	43		15	60	6	190			4,647
	1971		525		135	24		115		2	37			838
	1972	10	1,995		210	5		50	660	6	50			3,016
	1973		545		175	35		25	1,535	11	30			2,356
Magnolia to	1969		2,600	715	751			3,168	170					7,944
Winthrop Standpipe	1970		2,350	40	305	113		91	1,830	59				4,868*
	1971		360		131	37		970	5,120					6.618
	1972		605	3,090	375	90		470	4,995	21	10			9,656
	1973	15	695	2,660	385	46		1,080	7,165	15				12,061
Winthrop Standpipe	1969		2,158	7,205	627			1,270	7,915		25			19,200
to Cohasset Beach	1970		1,396	1,635	1,022	48		55	17,257	19				21,439*
Tower	1971	5	523	167	173	23		190	2,865	3	26			3,957
	1972		1,083	6,640	122	15		735	850	2				9,447
	1973	60	1,440	4,130	392	45		85	1,945	39				8,136
Cohasset Beach	1969		4,285	135	305			1,465	3,240		346			9,776
Tower to Rocky	1970	12	1,466		320	138		566	850	2	185			3,614*
Point	1971	40	1,084	99	137	15		203	1,023	3	305			3,109
	1972		4,027	30	70	10		326	17,220		1,541			23,224
	1973	40	2,270	30	75				525	7				2,947
Rocky Point o	1969				35			85	1,545	15				1,680
Cape Cod Canal	1970				32	18		67	551					668
	1971	2	35		100			92	244					473
	1972				5			330	780					1,115
	1973			25				60	485					570

Table 1. Cape Cod to Mount Hope Bay, January 1973

Area	Year	Mallard	Black Duck	Scaup	Goldeneye	Bufflehead	Old Squaw	Scoter	Eider	Merganser	Canada Goose	Brant	Misc.	Total
Cape Cod to Nobscusset Point	1969	50	201					100	1,700		398	50		2,559
	1970	30	1,010		25			80	915		515			2,575
	1971	10	974		10			60	1,825		1,059			3,938
	1972	10	299	16	50	42		834	1,888	9	503	20		3,671
	1973	55	2,223		57	16	10	30	1,218	20	568			4,197
Nobscusset Point to Great Island	1969		230					970	1,545		930	380		4,055
	1970		760		55	35		210	290		335			1,685
	1971	10	390		50	1		115	830		1,341	65		2,802
	1972	2	1,464		14	126	10	25	342		5,790	2,875		10,648
	1973		232		57	90	25	60	479	25		325		1,959*
Great Island to Race Point	1969		120		125	30			1,075					1,350
	1970		10		25	25		10	360					430
	1971		292		25			15	105	65				512
	1972	2	1,286		63	12	10	234	709	32	25			2,373
	1973		145		50	38	2	60	272	10				602*
Nauset Light to Monomoy Point	1969	51	2,850	50	740	50			2,750		4,035			10,526
	1970		2,060		550			435	1,300	25	3,810	6		8,186
	1971	25	643		235	335		125	2,140	22	1,733			5,278
	1972	481	5,104	335	2,323	698		190	4,832	22	2,436		30 CB	16,771
	1973	37	3,314		350	365		250	2,200	10	1,851			8,377
Chatham to Buzzards Bay	1969	445	2,076	950	670	240		1,490	1,100	20	919			7,910
	1970	60	1,034	200	1,480	300		130	370	15	680		50 CB	4,319
	1971	135	542	1,245	585	195		134	2,408	18	534			5,769
	1972	16	573	538	905	80		4,910	1,660	11	115			8,808
	1973		548	655	1,230	650	18	135	1,565	114	645			5,560
Mount Hope Bay and Taunton River	1969	30	1,320	200	40	10		100		18				1,718
	1970	80	1,080	2,380	355	35		1,627		110	1,435			7,102
	1971	24	317	3,283	340	73		990	180		425			5,632
	1972	10	585	4,500	245	8		27	35	20	1,397			6,827
	1973		550	940	95	5			40					1,630
Quick Sand Point to Sconticut Neck	1969	5	2,055	1,610	370	160		640		32	1,465			6,337
	1970		442		405	362		10,005		3	60			11,297*
	1971	10	141	257	505	67		145	65	3	217			1,634
	1972		635	1,915	949	175		1,365	2,800	3	45		2 CB	7,887
	1973		485	740	1,065	135		220	410	55	1,065		180 S	4,359

Table 1. Winter Inventory - Off Shore Islands, January 1973

Area	Year	Mallard	Black Duck	Scaup	Goldeneye	Bufflehead	Old Squaw	Scoter	Eider	Merganser	Canada Goose	Brant	Misc.	Totals
Martha's Vineyard and Elizabeth Islands	1969	20	560	250	725	150		1,045	4,370	40	650			7,810
	1970	23	345	55	940	125		140	505	46	865			3,194
	1971	94	758	370	458	217		1,209	1,135	69	1,117			5,457
	1972	14	1,158	1,510	1,296	300		2,305	1,545	96	1,684		180 C	10,718
	1973	158	1,015	515	1,300	569	123	1,595	1,735	153	943		234 S	8,492
Nantucket	1969	35	705					2,015	19,480	50	335			22,640
	1970	165	375		55	25		825	30,425	100	240			32,210
	1971	55	625	300	208	47		1,150	6,631	10	474		90 CB	9,590
	1972		902	775	716	63	4	740	4,695	88	383			8,366
	1973	50	733	310	805	210	67	725	6,605	69	319		3 S	9,896
Totals - New Hampshire line to Cape Cod Canal	1969	15	20,469	11,925	2,737			6,396	13,465	15	563			55,635
	1970	12	10,563	2,635	2,369	880		852	20,548	86	587			38,722
	1971	82	4,269	306	850	104	3	2,895	9,377	8	748			18,651
	1972	140	12,572	9,820	837	210		3,311	26,385	29	1,961			55,295
	1973	125	9,905	7,175	2,537	126		1,250	13,005	72	340			34,615
Totals - Cape Cod to Mount Hope Bay	1969	581	8,912	2,810	1,945	490		3,300	8,170	70	7,747	430		34,455
	1970	170	6,396	2,580	2,895	362		12,497	3,235	153	6,835	6	50 CB	35,594
	1971	214	3,299	4,735	1,750	691		1,594	7,553	108	5,309	65	2 CB	25,592
	1972	521	9,946	7,304	4,544	1,141	20	7,585	12,266	97	10,311	2,895	30 CB	56,985
	1973	92	7,497	2,335	2,904	1,303	55	1,147	6,184	234	4,353	325	180 S	26,684
Total - Off Shore Islands	1969	55	1,265	250	725	150		3,060	23,850	90	1,005			30,450
	1970	188	720	55	995	150		965	30,930	146	1,105			35,404
	1971	149	1,383	670	666	264		2,359	7,766	74	1,591		90 CB	8,047
	1972	14	2,060	2,285	2,012	363	4	3,045	6,240	184	2,067		180 C	19,084
	1973	208	1,748	825	2,105	779	190	2,320	8,340	222	1,262		237 S	18,388

* Includes unknowns. C = Coot; CB = Canvasback; S = Swans

Table 2. Waterfowl Inventory Species Composition Breakdown and Percent Change from 1972 and Previous Ten-Year Average

Species	1973	1972	Percent Change from 1972	Ten-Year Average	Percent Change from Previous Ten-Year Average
Black Duck	19,230	24,578	-21.8	22,996	- 16.4
Mallard	425	675	-37.0	485	- 12.4
Merganser	528	310	+70.3	321	+ 64.5
Scaup	10,335	19,409	-46.7	17,353	- 40.4
Goldeneye	7,546	7,398	+ 2.0	7,591	- 0.6
Bufflehead	2,208	1,714	+28.8	944	+134.0
Sea Ducks	32,491	58,856	-44.8	71,123	- 54.3
Canada Goose	5,955	14,339	-58.5	9,591	- 37.9
Canvasback	152	230	-33.9	-	-
Total	78,870	127,509	-38.1	130,404	- 39.6

Table 3. November Coastal Aerial Counts

Species	Closed Coastal Season 1972	Closed Coastal Season 1971	Open Coastal Season 1970	Open Coastal Season 1969
Black Duck	14,797	25,365	12,799	11,322
Mallard	890	813	839	389
Merganser	904	1,082	596	408
Scaup	6,693	23,163	4,209	14,925
Goldeneye	4,714	5,337	2,355	3,060
Bufflehead	1,575	921	341	2,014
Sea Ducks	62,684	54,264	50,543	45,718
Canada Goose	7,253	6,828	2,456	2,129

Recommendations: Winter inventory counts should be continued to provide trend data on wintering waterfowl populations. A November flight combining the November goose count and pre-coastal gunning season count should be made.

MASSACHUSETTS DIVISION OF FISHERIES AND GAME
Bureau of Wildlife Research and Management

Approved: _____
Colton H. Bridges, Superintendent

Prepared by _____
H. W. Heusmann
Waterfowl Biologist

Date _____

JOB PROGRESS REPORT

State: Massachusetts

Cooperator: Massachusetts Division of Fisheries and Game

Project No.: W-42-R-6 Project Title: Massachusetts Waterfowl Research Program

Job No.: VII-2 Job Title: Black Duck Imprinting Study

Period Covered: 15 January 1972 to 14 January 1973

Summary: One hundred thirty-four black ducks were reared from eggs produced by black duck breeding stock at the Ayer Game Farm and from eggs received from the Delaware Division of Fish and Game. Ducklings were imprinted in modified nesting cylinders and held overwinter in cylinder equipped pens. Twenty-eight baldpate from Saskatchewan were also held overwinter as breeding stock.

Objectives: To evaluate the possibilities of increasing black duck production in the state by the creation of beaver impoundments, and by developing a population of black ducks imprinted to nesting in above ground artificial nesting structures.

Procedures: Ducklings hatched from eggs of Delaware black ducks were used as breeding stock. Ducklings from these birds were hatched in incubators and then brooded for 40 hours in specially adapted nesting cylinders. Ducklings will be held overwinter in covered wire pens. Nesting cylinders will be present in the pens for further conditioning of the ducklings to the nesting structures.

Release of imprinted-conditioned ducklings will be made in the spring of 1973 on selected sanctuaries where nesting cylinders have been erected during the previous winter.

Findings: The Delaware breeding stock was divided into two groups, good black duck types and questionable black duck types based on wing speculum. The questionable birds were regarded as such due to some buff marking along the anterior edge of the speculum, a possible indication of mallard blood. There were seven "good" females and eight "questionable" females. Seventeen "questionable" males were removed, banded and released in the spring of 1972 at Norumbega Park in Newton, Massachusetts. Two of these males later returned briefly to the pen at Ayer. Another was shot in a town south of Ayer during the 1972 waterfowl season. A fourth bird was trapped during summer banding operations at Norumbega Park in 1972. Six "good" blacks were placed in with the "questionable" females and five in with the "good" females. The ducks produced a total of 130 eggs. While there were no direct observations of laying females, waterfowl project

Publication approved by Alfred C. Holland, State Purchasing Agent #5146

field agent, Robert Bellville, believed only seven hens were responsible for most of the production based on cylinder usage and egg shape and color.

Six dozen additional eggs were received from the Delaware Division of Fish and Game. All eggs were hatched at the State game farm in Sandwich, Massachusetts and the ducklings were imprinted according to the method described under Procedures. A total of 145 ducklings were hatched of which 134 were reared to flight stage. Ducklings hatched from "good" black duck parents were web-tagged for future identification. All the black ducks were held overwinter at the State game farm in Ayer.

In addition to the black ducks, 28 four to six-week-old baldpate ducklings were received from Dr. R. O. Crawford of the Poultry Science Department, University of Saskatoon, Saskatchewan. The ducklings were hatched from eggs collected from wild birds by Dan Blood, Fish and Wildlife Branch, Saskatchewan Department of Natural Resources. The ducklings were held in a covered pen at the Sandwich Game Farm overwinter and will be used as breeding stock in an attempt to establish cylinder nesting baldpate populations in Massachusetts.

Recommendations: The black ducks should be kept in holding pens on the proposed imprint areas prior to release. This will allow the birds to become accustomed to the new area and permit the establishment of new pair bonds within each group. If possible, release should be by the "gentle" method described by Brakhage (1953). Depending upon the degree of success in establishing breeding populations of black ducks from the adult releases, follow-up releases of preflight ducklings should be made on the imprint areas during the summer of 1973.

Stock to be keptoverwinter for spring release should be segregated by sex to prevent premature pair bond formation and subsequent disruption during spring releases.

MASSACHUSETTS DIVISION OF FISHERIES AND GAME
Bureau of Wildlife Research and Management

Approved: _____
Colton H. Bridges, Superintendent

Prepared by _____
H. W. Heusmann, Waterfowl Biologist

Date _____

Literature Cited

Brakhage, G.F. 1953. Migration and mortality of ducks hand reared and wild trapped at Delta, Manitoba. J. Wildl. Mgmt. 17(4):465-477.

JOB PROGRESS REPORT

State: Massachusetts

Cooperator: Massachusetts Division of Fisheries and Game

Project No.: W-42-R-7 Project Title: Massachusetts Waterfowl Research Program

Job No.: II-1 Job Title: Coastal and Inland Waterfowl Banding - Winter

Period Covered: 1 January 1973 to 15 March 1973

Summary: State personnel along with three cooperators banded a total of 955 ducks at 22 locations using bait traps or a cannon net. Four hundred sixty-nine ducks were banded as part of the regular winter black duck trapping program. Black ducks made up 81.9 percent of the total; mallards 10.6 percent; and mallard x black duck hybrids 7.5 percent. The park mallard winter banding program netted 378 mallards, 29 black ducks, 74 mallard x black hybrids, and 5 mallard x domestic hybrids.

Objectives: To band 1,000 wintering black ducks, the quota established for Massachusetts by the Banding Committee of the Atlantic Waterfowl Council, and to sample inland wintering waterfowl populations.

Techniques Used: Bait trapping stations for coastal black ducks were located in Cohasset, Westport, Buzzards Bay, Duxbury, mid-Cape and outer Cape areas. Cannon net locations were established in the Boston Harbor area. Cannon net locations were established at six inland sites. A bait trap was used at a seventh site. Limited success was experienced at Look Park where a cannon net was thrown manually over a fence to capture park birds.

Baiting of trapping sites began after the close of the 1972-1973 waterfowl season with actual trapping on the sites varying with response of birds to the bait site. Trapping procedures were the same as described in Job Progress Report W-42-R, Job No. II-1. Records of all newly-banded birds as well as returns and foreign recoveries were recorded on individual file cards and past records updated on return birds. Federal banding schedules were submitted.

Findings:

Coastal Trapping

Nineteen hundred seventy-three started off as an extremely cold winter with extensive icing. Birds responded well to prebaiting. However, by 18 January, before actual trapping started, temperatures rose into the high fifties, and except for brief cold periods the weather remained mild until

spring. As a result trapping success was low for the second year in a row (Table 1). A total of 384 black ducks, 35 mallard x black hybrids and 50 mallards were banded. A single cannon net shot in the Boston Harbor area was unsuccessful when a rocket burned through the attached ropes resulting in only partial net deployment.

Black ducks made up 81.9 percent of the birds banded in 1973 versus 77.1 percent in 1972; hybrids comprised 7.5 percent (11.1% in 1972) and mallards 10.6 percent (7.4% in 1972) of the total.

Inland Trapping

Success of inland sites was limited by poor ice conditions and generally mild weather. The results of the trapping program are presented in Table 2. A total of 378 mallards, 29 black ducks, 74 mallard x black hybrids and 5 mallard x domestic hybrids were banded. Foreign recoveries and non-park banded birds were noted.

Mallards made up 77 percent of the banded birds, black ducks 6.0 percent, mallard x black hybrids 15.2 percent and mallard x domestic hybrids 1.0 percent.

Warm weather hinders trapping in park situations in several ways. First, ice is necessary for setting up the cannon net in several parks. The only shot made at D. W. Field Park in Brockton occurred at the start of the season when sub-zero temperatures created safe ice conditions. A single shot made at Norumbega Park late in the season was possible when a cold weather front lasted for several days, freezing portions of the Charles River. All other shots were made over land. Several potential sites (Carling Brewery, Natick; Furnace Pond, Pembroke, etc.) could not be utilized due to lack of ice. Mild weather also means birds expend less energy to keep warm and therefore are not as hungry. This, coupled with the fact that more people visit the park in warm weather to feed the ducks makes attracting the duck to a bait site difficult.

Recommendations: Winter banding to meet the black duck banding quota established by the Atlantic Waterfowl Council Banding Committee should be continued in 1974. Further sampling of inland wintering sites should be continued.

Table 1. Summary of winter coastal trapping

Area	Black Duck	Mallard X Black Hybrid	Mallard	Total
Cohasset	25		19	44
Plymouth-Duxbury	34	9		43
Westport				
Delano's	5			5
Lloyd State Park	1			1
Brayton Point	18			18
Hulda Cove	4			4
Sub-total	28			28
Buzzards Bay				
Canal Entrance	19	2	1	22
Lewis Point	27	1	1	29
Wareham River	27	7	7	41
Weweantic River	10	1		11
Sub-total	83	11	9	103
Mid-Cape				
Indian Trail	70	8	21	99
Outer Cape				
Briar Springs	63	4		67
Town Cove	21	1		22
Nauset Spring	54	1	1	56
Pochet Neck	6	1		7
Sub-total	144	7	1	152
All Areas Total	384	35	50	469

Table 2. Summary of winter inland trapping.

Area	Black Duck	Mallard x Black	Mallard	Mallard x Domestic	Other	Total
Forest Park, Springfield		8	69			77
Norumbega Park, Newton	2	6	34			42
D. W. Field Park, Brockton	12	25	85			122
Flax Pond, Lynn	14	22	105			141
Horn Pond, Woburn		5	23			28
Town Hall Pond, Wellesley	1	7	47	3		58
Look Park, Northampton		1	15	2		18
Total	29	74	378	5		486

Acknowledgments: The personnel of the Division of Fisheries and Game wish to thank Mr. Taisto Ranta, town warden of Barnstable, Mr. H. Nickerson, deputy town warden, and Mrs. J. T. Gormely of Cohasset for their assistance in the banding program.

MASSACHUSETTS DIVISION OF FISHERIES AND GAME
Bureau of Wildlife Research and Management

Approved: _____
Colton H. Bridges, Superintendent

Prepared by _____
H. W. Heusmann, Waterfowl Biologist

Date _____

PERFORMANCE REPORT

(Job program report)

State: Massachusetts

Cooperator: Massachusetts Division of Fisheries and Game

Project No. W-42-R-7 Project Title: Massachusetts Waterfowl Research Program

Job No. II-1/2 Job Title: Coastal and Inland Waterfowl Banding (Preseason Segment)

Period Covered: 1 April 1973 to 15 October 1973

Summary: Budgetary problems which prevented airboat nightlighting and sharply curtailed bait trapping activities resulted in the banding of only 641 waterfowl during the 1973 season. Only 262 ducks were banded during preseason banding activities by Division personnel. The season total includes 107 hand-reared black ducks, 85 hand-reared common eider, 74 nest-trapped wood ducks and 4 hooded mergansers. Wild-trapped birds included 109 Canada geese, 30 mallards, 47 black ducks, 15 black x mallard hybrids and 8 wood ducks; park-trapped birds included 149 mallards, 4 black ducks, 6 mallard x black hybrids and 4 mallard x domestic hybrids.

Objectives: To band a well-distributed sample of coastal and inland waterfowl populations, both preseason and on the wintering grounds in accordance with quotas established by the Banding Committee of the Atlantic Waterfowl Council.

Procedures: Techniques employed to capture waterfowl included the use of nest box trapping, drive trapping, bait trapping and cannon netting. The airboat was inoperative and could not be used nightlighting.

Findings:

Hand-Reared

A total of 107 hand-reared black ducks were released between 3 April and 10 April 1973. These ducks were released as part of research project W-42-R-6:VII-2, Black Duck Imprinting Study.

Eighty-five hand-reared common eiders were released at Penikese Island in Buzzards Bay, Massachusetts. These birds were primarily young-of-the-year hand-reared by Philip Stanton of Upton, Massachusetts. The birds were taken as ducklings or eggs from wild nests in Casco Bay, Maine, hand-reared until four to eight weeks of age and then released.

Publication approved by Alfred C. Holland, State Purchasing Agent #5146

Nest Trapping

A total of 74 wood ducks and 4 hooded mergansers were banded when captured on the nest while conducting research project W-42-R-7, Jobs IV-1 and IV-2, Wood Duck Production Studies.

Goose Drive Trapping

One hundred nine Canada geese were banded during drive-trapping operations in conjunction with research project W-42-R-7:V-1, Gosling Transplant Program.

Preseason Banding

Budgetary problems largely eliminated preseason banding work during 1973. A ton of corn earmarked for preseason bait trapping was converted into game bird food for the Black Duck Imprinting Study (W-42-R:VII-2) when monies budgeted for that use proved inadequate in the face of rapidly rising grain prices. An emergency purchase of 800 pounds of corn provided for only limited baiting and cannon netting opportunities. As a result, six bait traps were loaned to the Great Meadows National Wildlife Refuge and were operated by Great Meadows personnel during mid and late summer. Division personnel began operating the bait traps in the fall, using Federally-purchased corn when the refuge could no longer provide the personnel necessary to operate the traps. A total of 22 mallards, 43 black ducks, 10 mallard x black duck hybrids and 8 wood ducks were banded by Division personnel at the refuge.

Eight mallards, 4 black ducks, and 5 mallard x black hybrids were banded using a walk-in bait trap at the Suasco A-1 watershed impoundment in Westboro.

Because of the shortage of bait grain, night-time drive trapping attempts were made at three park sites. The first drive was made on 19 July at Norumbega Park. Fyke net leads were set out into the water and a holding pen established on shore. It was necessary to set up a ramp to allow the ducks to climb the embankment. Eighty-four mallards, 3 mallard x domestic hybrids and 2 mallard x black hybrids were banded and 30 previously banded birds were recaptured. A number of ducks escaped the trap by flushing when in front of the trap. Most of the ducks caught were flightless adult males.

A second drive was made on 25 July at Town Hall Pond in Wellesley, a fenced-in area; 20 mallards, 2 black ducks and 1 mallard x black hybrid were banded. Approximately twice that number escaped by flushing or bypassing the drivers. A third drive made 27 July was unsuccessful when all the birds flushed off the area.

Two cannon net shots were made this year. The first at Horn Pond, Woburn, yielded 32 mallards, 2 blacks, 3 mallard x black hybrids and 1 mallard x domestic hybrid. The second at Forest Park, Springfield, netted 13 mallards.

No airboat nightlighting was conducted this year due to the poor condition of the airboat. The hull was re-fiberglassed and repairs to the steering mechanism were made but the necessary engine overhaul could not be completed due to a shortage of funds.

Recommendations: Banding should be continued on a statewide basis. Requisition should be made for a new airboat engine. The 1972 season proved this method to be one of the most economical ways of banding waterfowl. Driving at park sites should be expanded to as many parks as possible and started in mid-June in order to capture young before they reach flight stage. Later drives for molting adults should be made.

MASSACHUSETTS DIVISION OF FISHERIES AND GAME
Bureau of Wildlife Research and Management

Approved: _____
Colton H. Bridges
Superintendent

Prepared by _____
H. W. Heusmann
Waterfowl Biologist

Robert Bellville
Project Assistant

Date _____

JOB PERFORMANCE REPORT

State: Massachusetts

Cooperator: Massachusetts Division of Fisheries and Game

Project No.: W-42-R-7 Project Title: Massachusetts Waterfowl Research Program

Job No. IV-1 Job Title: Wood Duck Population Study: Nesting Success and Brood Survival (amended)

Period Covered: 1 April to 15 October 1973

Summary: Major emphasis of this project was shifted from intensive studies of overall nesting success to a critical evaluation of the role played by dump nesting with respect to duckling production.

The placement of dummy eggs in wood duck boxes had no effect on nest initiation and questionable effects on nest attendance. Nineteen seventy-two data indicated nest attendance of dummy egg nests was significantly lower than for normal nests but 1973 data indicated no difference. The creation of artificial dump nests using game farm eggs led to the additional production of 32 ducklings from ten nests. The project was considered to have been of limited success and requires further study.

An automatice color-marking device was successfully used to color mark three incubating hens. It failed to mark five other hens. Further research is necessary to develop a usable marking solution.

Wood duck production rose slightly over the 1972 figure and has increased more than 30 percent since 1970 on study areas distributed statewide.

Background: Dump nesting by wood ducks (two or more hens laying in the same box) is a common occurrence in box-nesting populations. During the period 1967 to 1972, 21 percent of the wood duck nests checked by Division biologists were known dump nests. In order to learn more about some of the causes and effects of dump nesting, a series of research problems was initiated.

Hartman (1972) studied dump nesting in wood ducks in Missouri and observed that hens appeared to prefer boxes with eggs over unoccupied boxes for nesting. One segment of this study was designed to determine what effects the prior presence of dummy eggs would have on nest box utilization.

Publication approved by Alfred C. Holland, State Purchasing Agent #5146

Previous studies at Great Meadows (Heusmann 1972) indicate that brood survival was proportionately as high for dump nest broods as it was for broods from normal nests. This seems to indicate that on certain areas, at least, normal brood size may not be the optimal brood size. Releases of hand-reared wood ducks to augment local breeding populations is an expensive proposition and survival of young to their first breeding season is usually very poor. Observations of hand-reared blacks and mallards indicate that such ducks are usually poor mothers. The same may hold true for hand-reared wood ducks. Therefore, a second segment of this project involved adding eggs of game farm wood ducks to pre-incubated nests of wild hens, thus creating an artificial dump nest.

The role that dump nesting plays in total wood duck production cannot be adequately analyzed until the reproductive status of the dumping hen is known. If the hen renests, dump nesting is probably beneficial to production; if not, it may be detrimental. Therefore, it is necessary that a dumping hen be identified as such so data can be gathered on renesting activities. Since hens handled before reaching late stages of incubation frequently abandon their nests, a means of automatically marking the hens for future identification without causing nest desertion must be developed. This task constituted the third segment of this project.

Procedures:

Dummy Egg Study

Three areas of moderate wood duck production representative of typical Massachusetts wood duck nesting habitat were chosen for a 1972 pilot study: Beaver Brook, Littleton; Bristol-Blake State Reservation, Norfolk; and Breeding Pond, Webster. In 1973, only one section of Beaver Brook was used in the study, but three additional areas were added: Norfolk Correctional Institution, Norfolk; Long Pond, Rutland; Turkey Hill Brook, Paxton.

The nesting boxes present on all areas were similar to those described by McLaughlin and Grice (1952). The nest boxes on each area were segregated into two categories; those used at least once by nesting wood ducks during the previous two years and those that were not. Dummy eggs were placed in half of the boxes in each category as selected by random sampling.

Twelve dozen white, medium size chicken eggs in 1972 and sixteen dozen in 1973 were hard boiled and dyed with a commercial food coloring to simulate wood duck egg color. From these stocks, an appropriate number of eggs was selected each year on the basis of wood duck egg shape. Three eggs were placed in each selected box and buried in shaving to simulate an active wood duck nest. All eggs were in place for the 1972 season by 14 March and by 8 March for the 1973 season. Normally the first wood duck nests in central Massachusetts are not initiated before 1 April. Dummy eggs that cracked due to freezing were replaced during the first checks in April of each year.

Artificial Dump Nest Study

The wood ducks used as breeding stock in this study consisted of first generation young of wild-trapped birds. The initial flock was comprised of twelve females and eight males. One male died shortly before the start of the nesting season. Three of the remaining males were observed in constant attendance of three female black ducks, having apparently established at least a one-sided pair bond. The black ducks were part of a larger flock being held in the same pen as the wood ducks in conjunction with another project, W-42-R-7:VII-2, Black Duck Imprinting Study. These pair bonds were believed broken when most of the black ducks were released.

In order to augment the breeding population, a drift trap was set up outside of the pen. Five wild male wood ducks were captured in this trap. Two were killed by cats but three others were removed and released into the pen, one of which was suffering from a broken ankle. The wood duck flock produced a total of 226 eggs, 90 of which were used to create artificial dump nests. The remaining eggs were incubated at the Sandwich State Game Farm.

Nest boxes on the Great Meadows National Wildlife Refuge impoundments and on the Area 4 section of refuge property on the Concord River as well as boxes located on the Buttrick Estate (Town of Concord) were checked at seven to ten-day intervals to determine dates of nest initiation.

When a nest was discovered, it was rechecked in two to three days in order to determine egg deposition rates. If the egg deposition rate did not exceed one egg a day, it was considered a normal nest and included in the study. With one exception, game farm wood duck eggs were not added to the nest until at least six eggs had accumulated (in one case, game farm eggs were added to a clutch of five eggs). Six game farm eggs were added to each of the study nests.

Automatic Color-Marking Device

Two prototype devices developed by Peter R. Pekkala, Wildlife Restoration Project Field Agent for the Connecticut Valley Wildlife District, were field tested in 1972. Both devices were modified tunnel entrance predator guards (Figure 1). The first involved strips of foam rubber inside the guard. The rubber was smeared with lipstick which rubbed off on the entering bird (Figure 2).

The second device involved a treadle which, when depressed by an entering or exiting wood duck, caused a drop of marking fluid to drop upon the back of the duck (Figure 3, 4, and 5). This device was decided upon for further testing in 1973 and six more devices were constructed. Marking fluids consisted of thinned airplane dope, thinned enamel, thinned latex and gentian violet dye.

FIGURE 1

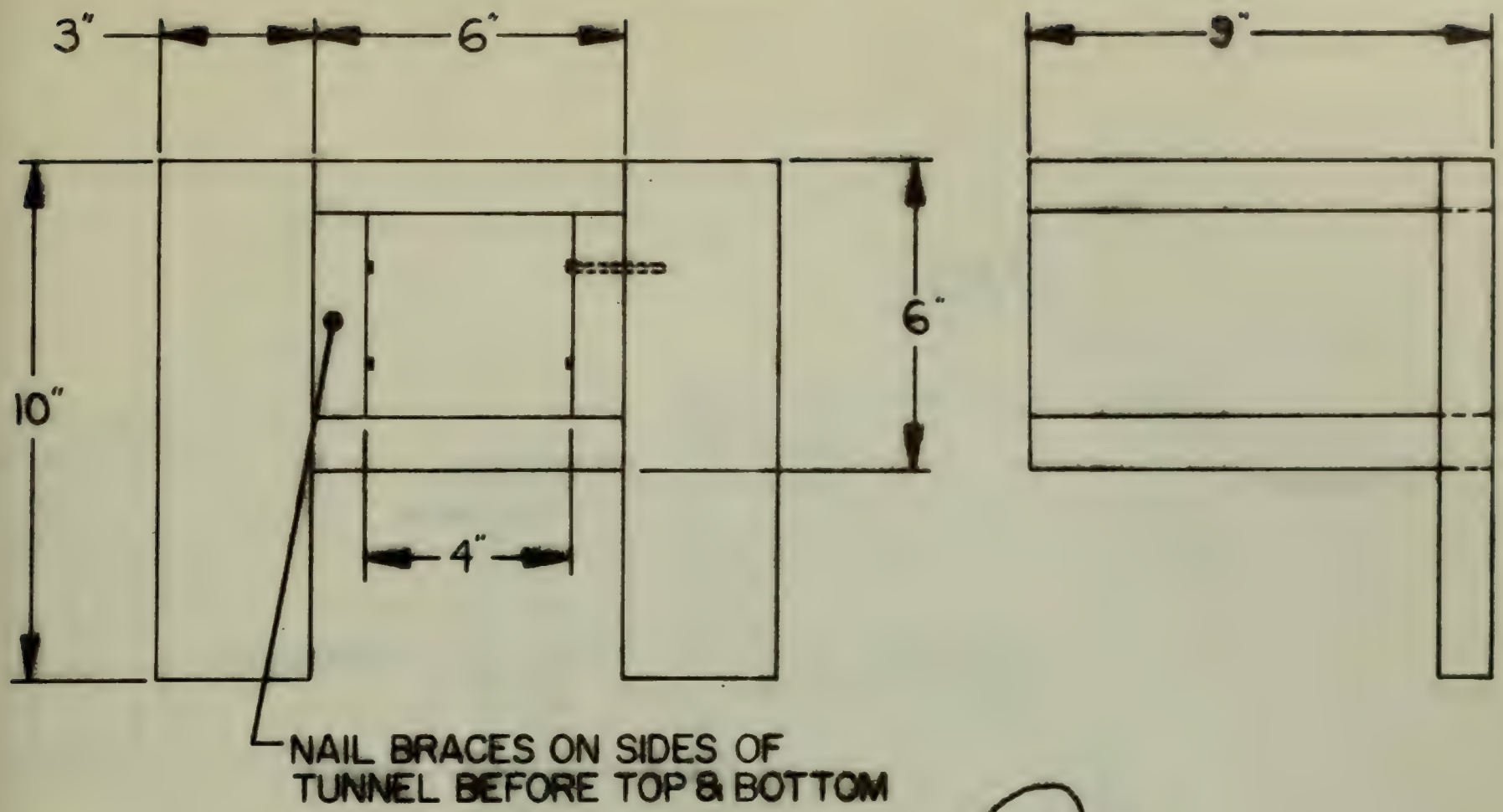

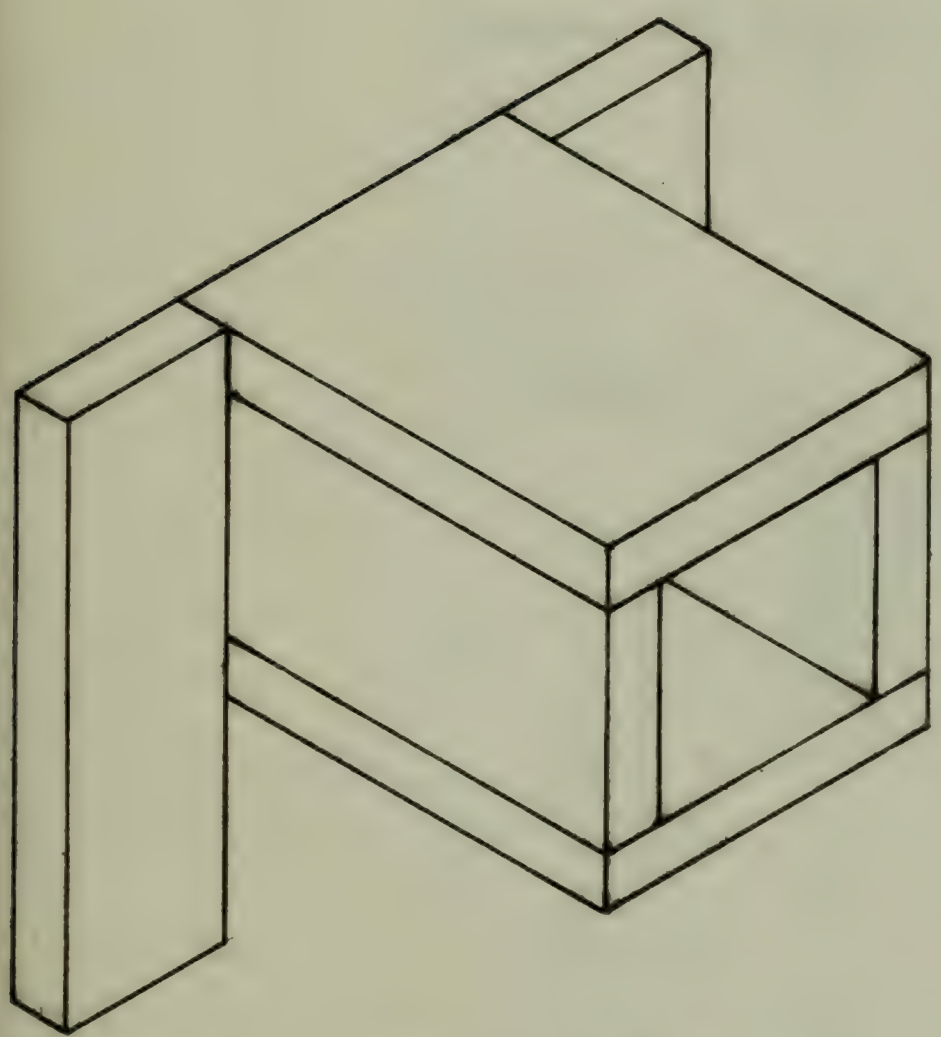

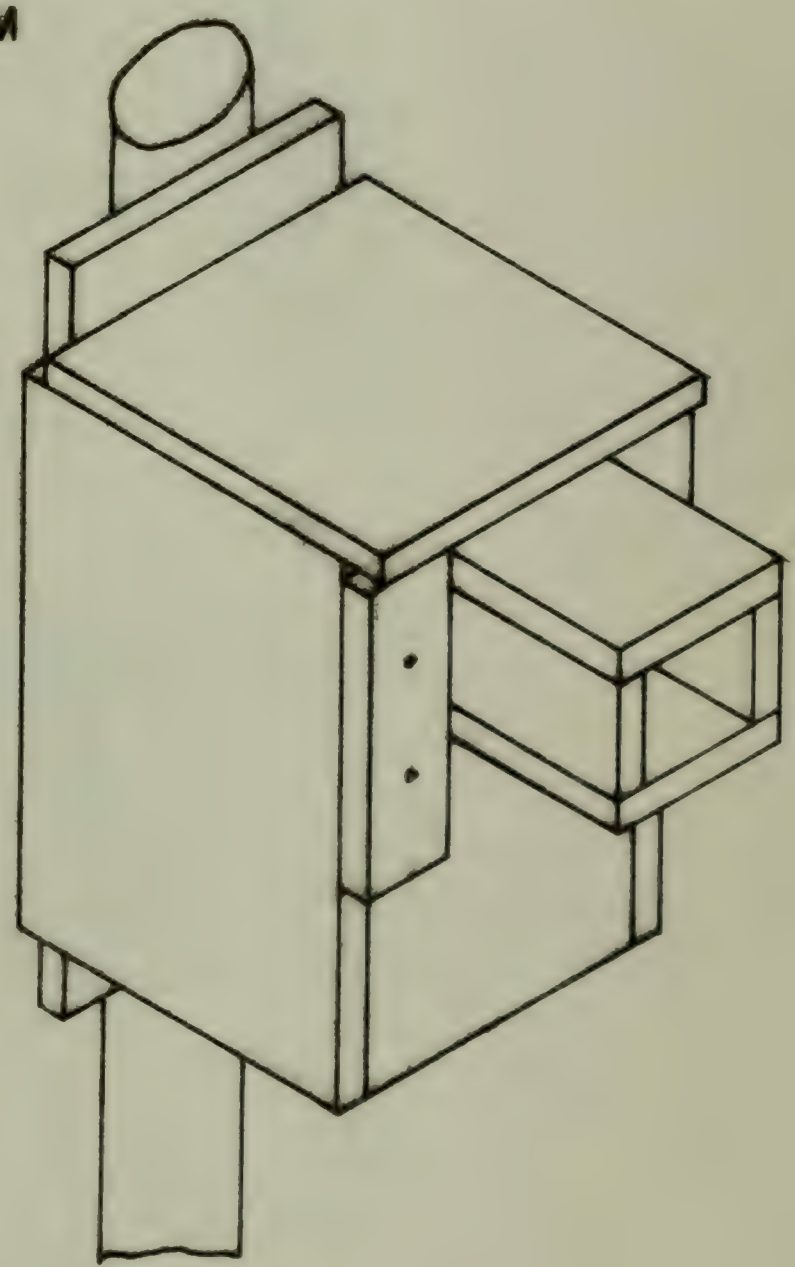

PREDATOR GUARD

SCALE 1/4" = 1"

FOR PROTECTION FROM RACCOONS

FIGURE 2
SCALE 1" = 1/2"

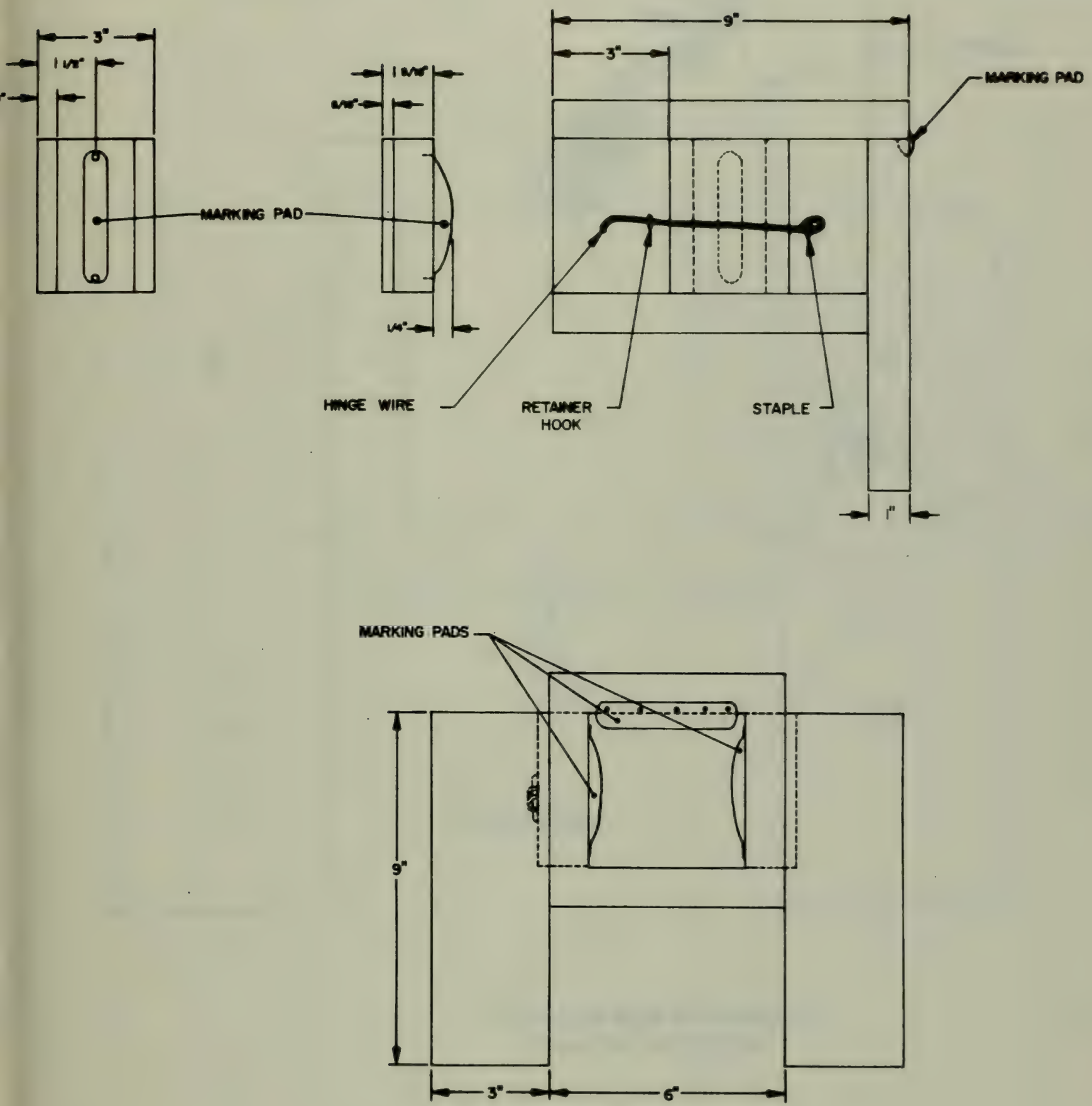

FIGURE 3A

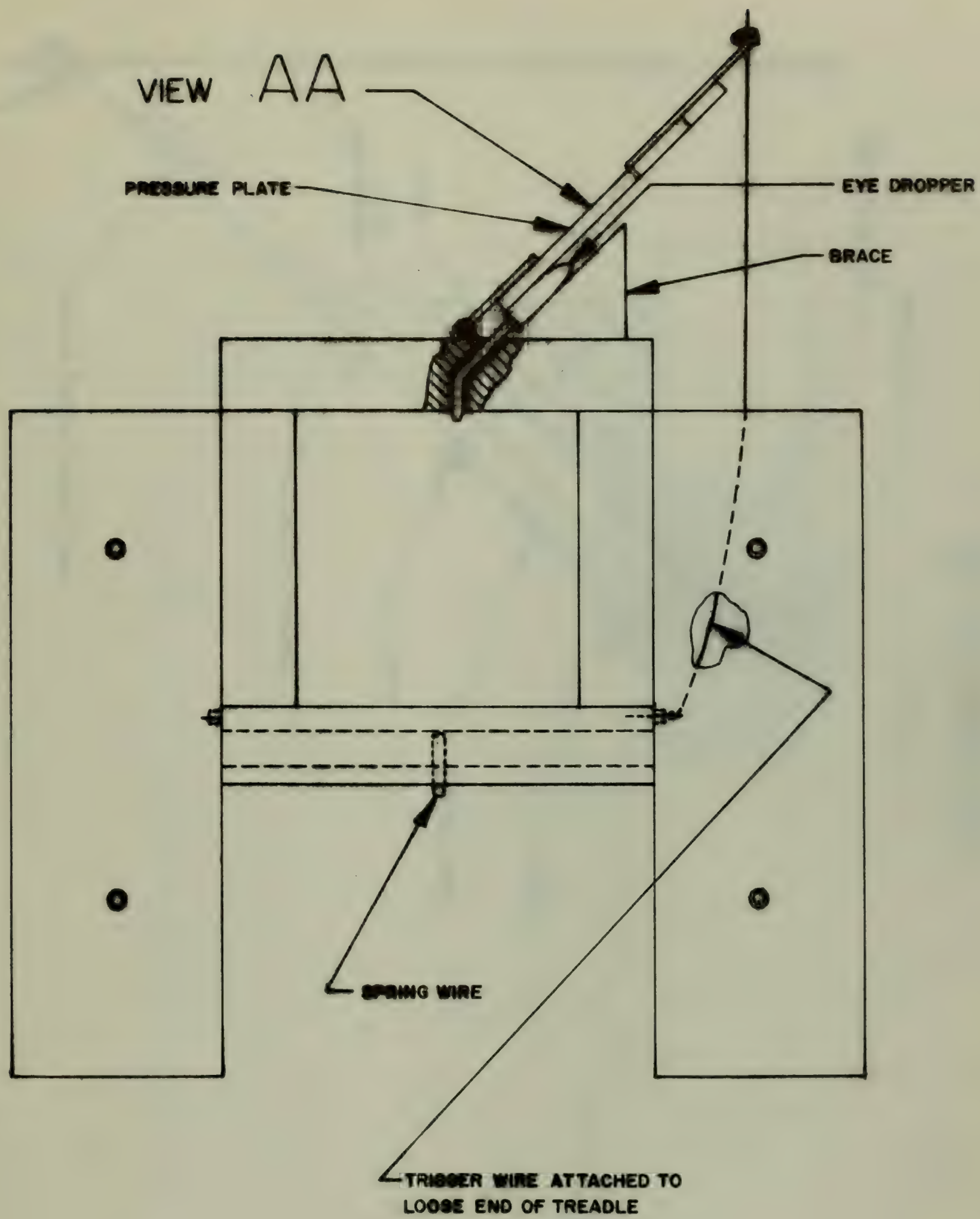
VIEW AA
PRESSURE PLATE
EYE DROPPER
BRACE
SPRING WIRE
TRIGGER WIRE ATTACHED TO
LOOSE END OF TREADLE

FIGURE 3B

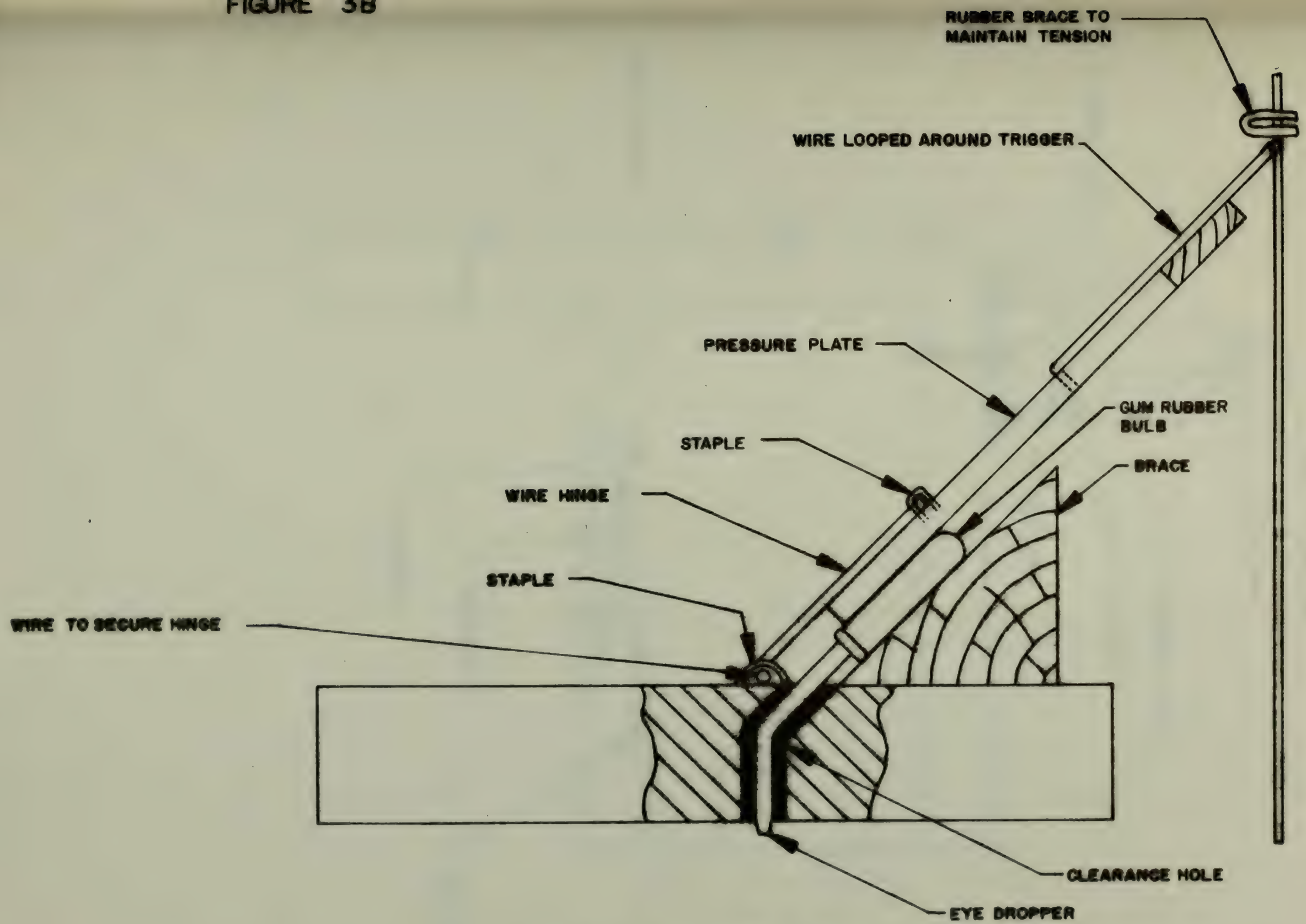

VIEW AA

SCALE 2/1

FIGURE 4

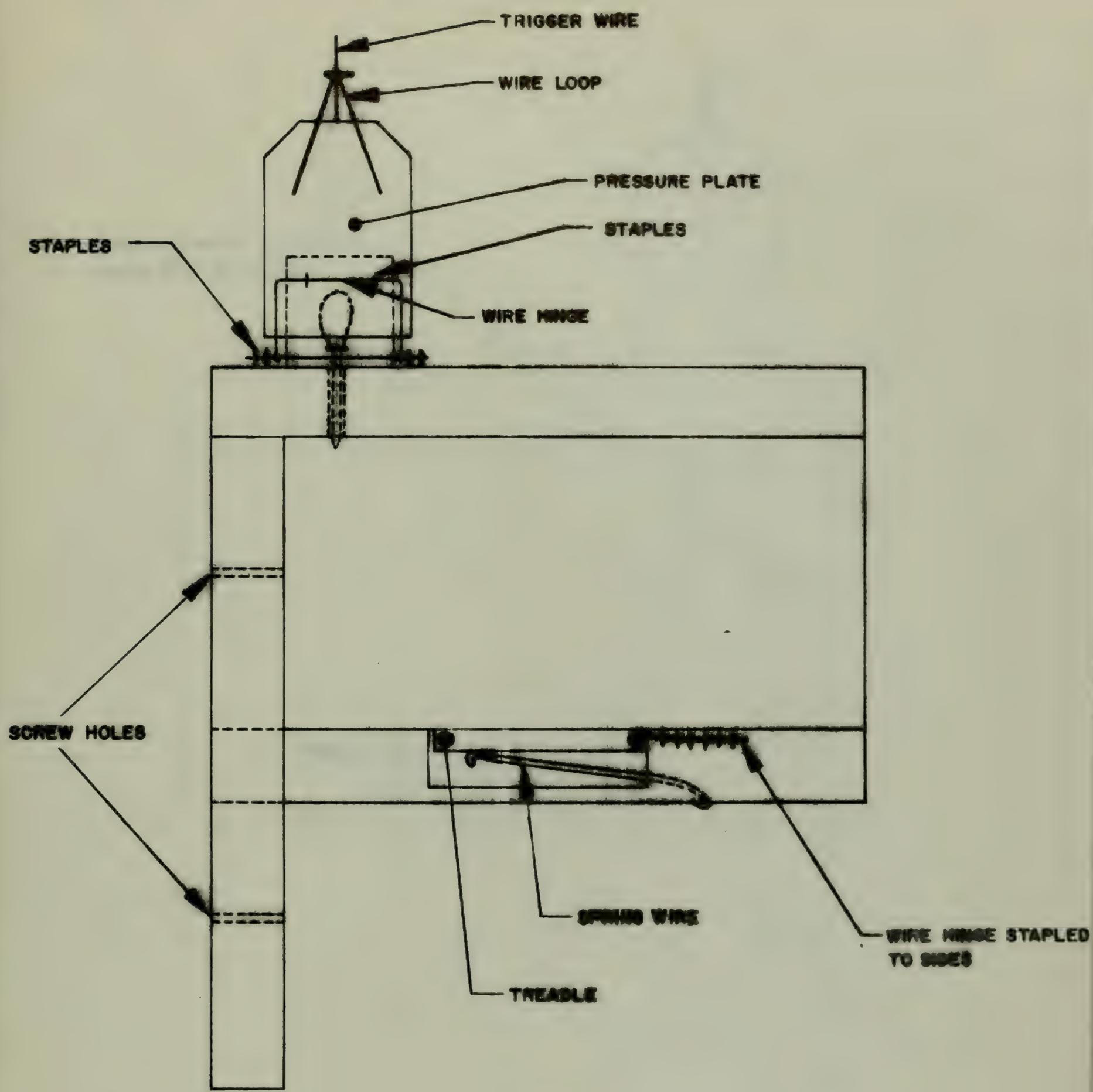
TRIGGER WIRE
WIRE LOOP
PRESSURE PLATE
STAPLES
STAPLES
WIRE HINGE
SCREW HOLES
SPRING WIRE
WIRE HINGE STAPLED TO SIDES
TREADLE

FIGURE 5

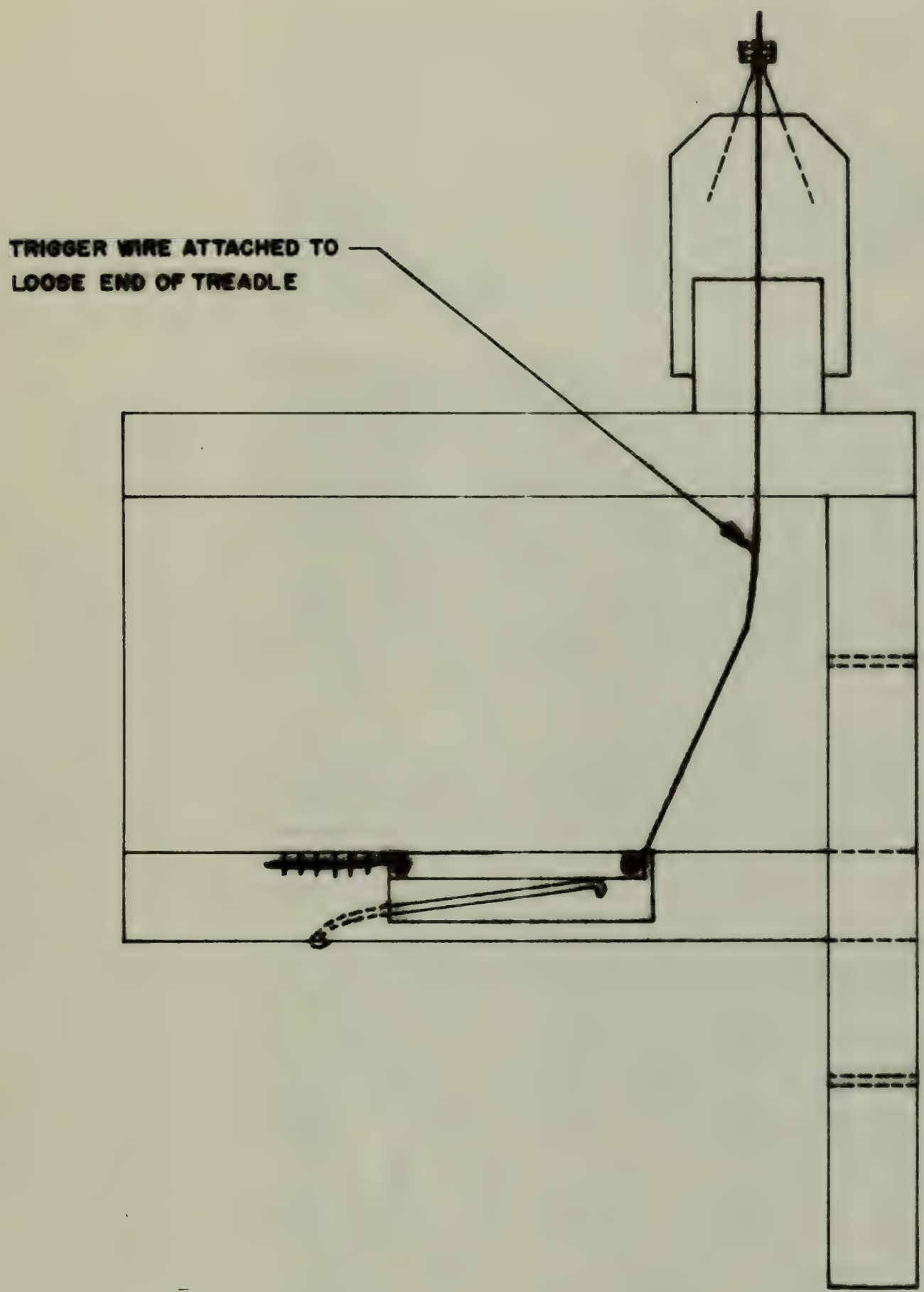

Findings:

Dummy Egg Study

This study was first conducted in 1972. At that time, the sample size consisted of 31 boxes with dummy eggs in which there were fourteen nest starts and 35 normal boxes in which there were seventeen nest starts. These are utilization rates of 45.2 percent and 48.5 percent respectively. Using a chi-square test for goodness of fit, there was no significant difference observed in nest initiation at the .95 level. A comparison of nest starts in boxes previously used (normal nests, 12; dummy nests, 9) with those of no previous two-year use (normal nests, 5; dummy nests, 5) also revealed no significant difference.

However, only eight of the fourteen nests started in dummy nest boxes were incubated versus fifteen out of seventeen in normal boxes. Comparing the non-incubation rates for both types of study nests with that of the same areas during the previous two years (or when compared with the non-incubation rate of other areas during 1972), a significantly lower rate of nest attendance for the dummy egg nests than for the normal nests was revealed. Several hens that laid eggs in boxes with eggs already present never returned to incubate the eggs. In order to determine if this constituted evidence of a dumping hen selecting a box with eggs in which to dump, the test was repeated in 1973.

There were 35 nest boxes with dummy eggs and 35 without in the 1973 sample. Thirteen nest starts were recorded for each category. All thirteen of the nests initiated in normal boxes were incubated, as were twelve of the thirteen nests in dummy egg boxes. There was no significant difference in nest initiation or nest attendance.

One interesting observation on attendance warrants discussion. In 1972, seven of the thirteen hens handled that nested in normal boxes were unmarked birds and therefore believed to be first nesters. Four of six hens handled that nested in dummy egg boxes were new hens. In 1973, these figures were six of twelve and eight of twelve. Thus we observe that the ratio of new to old hens in normal boxes was roughly 1:1 (13 to 12) but was 2:1 (12 to 6) in the dummy egg boxes. One possible hypothesis for this would be that some young hens tend to select boxes with eggs and are subsequently ousted when the first hens begin incubation. However, when a young bird selects a box with dummy eggs, there is no original nester to come along and oust the yearling. Unfortunately, the sample size is too small to evaluate this hypothesis statistically.

Artificial Dump Nest Study

Six game farm wood duck eggs were added to each of fifteen nests. Eggs were not added until at least six wild eggs had been deposited in the box. When the wild eggs accumulated at a rate faster than one a day, the nest was considered a dump nest and was not included in the study. In most cases, the game farm eggs were added to clutches of six to eight eggs. No nest abandonment resulted from adding eggs to the boxes but one hen abandoned after 36 days of incubation. The hen had been irregular in nest attendance.

Fertility of game farm eggs was 79 percent. The hatching rate was 40 percent. Ten of the fifteen hens involved in the study were successful in hatching off one or more game farm ducklings. An attempt was made to segregate game farm ducklings at hatching for web-tagging purposes by placing the eggs in a nylon net bag after 28 days of incubation. The bagging attempt was unsuccessful. In each of the three instances that it was tried, the hen worked the bag to the side of the box causing chilling or delayed hatching. Eight ducklings were killed in the shell by chilling while a ninth successfully hatched 48 hours late when placed in with another clutch. This, in part, accounts for the low hatching rate. A total of 32 game farm ducklings left the box with the hens.

From the point of view of creating large broods, the study was unsuccessful. Only one hen left with sixteen young. However, in most instances, the resulting brood size was larger than the hen alone would have produced.

Since wood ducks are believed to be determinant layers (laying until the clutch "feels right"), the question is posed, "Did the adding of game farm eggs result in the wood duck laying fewer eggs herself?" A statistical analyysis of the data presented in Table 1 comparing the number of eggs laid by wood ducks in artificial dump nests with that of birds laying in normal nests in the same geographical region indicates no significant difference in clutch size.

Automatic Color-Marking Device

Both prototypes were successful in color marking wood ducks in 1972. Only a single test was made with each device at the end of the nesting season. The dropper type was considered to possess the best potential for further testing and six more models were constructed and ready for use by the middle of 1973's nesting season.

The main problem in color marking female wood ducks was finding a suitable marking fluid that (1) possessed a variety of colors, (2) would not dry up and block the stopper, and (3) would be visible on a bird in the hand for at least five weeks.

Table 1. Clutch Sizes of Suasco Watershed Wood Duck Nests, 1973

	Natural Nests	Artificial Dump Nests*
	12	14
	11	11
	14	10
	11	9
	13	9
	11	9
	15	11
	10	10
	12	11
	11	9
	8	10
	15	13
	10	9
Totals	153	135
Average	11.7	10.4

$S\bar{d}$ = .721 = No significant difference at .95

* Number of eggs laid by the incubating wood duck.

Both airplane dope and enamel were found to dry up in the dropper within six to twelve hours. When thinned too much, the solution would run from the dropper due to gravitational pull. Gentian violet matched the wood duck's own color too closely to be useful. Latex paint was considered acceptable for field testing when cut to proper consistency with 70 percent grain alcohol. The alcohol was believed to help cut normal feather oils to insure a better mark.

The dropper type predator guard devices were placed on ten active, pre-incubated nests. No cases of abandonment occurred due to the device, but in one case, an unknown predator broke up the nest, while in a second case starlings built a nest on top of the pre-incubated wood duck eggs. Of the remaining eight nests, three females were definitely color marked, three were definitely not marked, and two hens were not examined closely but had no readily discernible mark.

In all cases but one, the latex had dried up in the tip of the dropper, effectively preventing further marking. In the single exception, the dropper was empty and paint smeared on the ceiling of the guard indicating the hen had been marked on the tail. However, when examined four weeks later, the hen was unmarked.

Three out of five hens being marked is not considered acceptable and further research is required. The dropper type marking device has been proven to be mechanically functional. The problem lies with the marking solution.

Production Data

Incidental to the previously reported findings, a certain amount of incidental production data was recorded. Nesting data for Massachusetts study areas is presented in Table 2. There were 64 nest starts in 213 boxes in 1973 compared to 60 starts in 239 boxes in 1972. Fifty-seven successful nests produced 689 young in 1973 versus 510 young from 46 successful nests in 1972. Production on the Great Meadows National Wildlife Refuge impoundments dropped to the lowest level in the impoundments' 25-year history. However, this is misleading. Nest boxes were erected on the Concord River immediately adjacent to the impoundments in 1968. The number was increased in 1972. Production on this section of the river has risen from zero in 1968 to five nest starts in 1972 to eleven starts in 1973. Three of the hens handled in these boxes had previously nested on the impoundments. The reason for the hens' move is unknown, but may be related to the better cover that exists on the river.

On a statewide basis, wood duck production has increased over 30 percent since 1970. Production on certain ponds and marshes has decreased while it has increased on others. In certain cases, the decrease can be attributed to gunning pressure or nest predation (Nipmuc Pond), or habitat changes (Turkey Hill Brook). On other areas, the reason for the decline is not known.

Table 2. Wood duck nesting results for Massachusetts study areas, 1973

Area	Number of Available Boxes	Number of Nest Starts	Number of Successful Nests	Number of Ducklings Produced
Great Meadows N.W.R.	35	3	2	25*
Greenough Estate	17	9	7	87
Estabrook Pond	13	4	4	42
Buttrick Estate	16	5	4	50**
Ayer Game Farm Pond	5	0***	0***	0
Breeding Pond	22	12***	11***	124
Chaffins Pond	6	0	0	0
Fisk Mill Pond	17	12	10	144
Nipmuc Pond	15	0***	0***	0
Long and Muddy Ponds	14	4***	4***	40
Spruce Pond	2	1	1	10
Turkey Hill Brook	7	1	1	12
Westboro Management Area	12	0	0	0
Bristol-Blake Complex	32	13	13	155
Totals	213	64	57	689

Twenty-nine percent (29%) of boxes were used.
Eighty-nine percent (89%) of nest attempts were successful.
Number of ducklings produced per successful nest was 12.1.

* Includes 4 game farm ducklings
** Includes 7 game farm ducklings
*** Plus 1 hooded merganser nest.

Recommendations: Two years of data on the effects of dummy eggs in wood duck nest boxes indicate no effects on nest initiation for the population as a whole. However, the data does indicate that such eggs may influence yearling nesting. If the work load permits, this study should be expanded and continued for one more year in order to determine if there is a statistically valid inference that can be drawn from the three years of data.

Use should be made of game farm wood duck eggs to increase the size of wild wood duck clutches on areas where wood ducks remain on the site after hatching. This would be especially desirable in areas where current production is low due to unusual factors such as the temporary low water levels at Turkey Hill Brook, and Nipmuc Pond where gunning pressures and raccoon predation destroyed the population. In using game farm wood duck eggs, maximum fertility should be strived for by having an excess number of breeding males. The use of spring-captured wild drakes is desirable. Eggs should also be collected at weekly intervals and only the freshest eggs used in creating artificial dump nests in order to increase hatchability.

Efforts should be continued to find a solution for use in the automatic marking devices which (1) remains free-flowing for at least 36 hours, (2) is visible on the bird for at least five weeks, and (3) can be created in a variety of light colors.

Incidental production records should be kept in conjunction with other work of Project W-42-R, Jobs IV-1, IV-2 and VII-2.

Literature Cited

Hartman, G. W. 1972. The biology of dump nesting in wood ducks. M.S. Thesis. Univ. Mo., Columbia. 66 pp.

Heusmann, H. W. 1972. Survival of wood duck broods from dump nests. J. Wildl. Manage. 36(2):620-624.

McLaughlin, Charles L. and David Grice. 1952. The effectiveness of large scale erection of wood duck boxes as a management procedure. Trans. N. Amer. Wildl. Conf. 17:242-259.

MASSACHUSETTS DIVISION OF FISHERIES AND GAME
Bureau of Wildlife Research and Management

Approved: _____
Colton H. Bridges, Superintendent

Prepared by: _____
H. W. Heusmann, Waterfowl Biologist

Date _____

Performance Report

(Job progress report)

State: Massachusetts

Cooperator: Massachusetts Division of Fisheries and Game

Project No.: W-42-R-7 Project Title: Massachusetts Waterfowl Research Program

Job No.: IV-2 Job Title: Wood Duck Population Study: Evaluation of Starlingproof Nest Boxes

Period Covered: 1 April 1973 to 14 July 1973

Summary: Wood ducks successfully nested in 13 of 67 cylinders, producing 136 young. One sparrow hawk and one black duck also nested successfully in cylinders. Cylinders were used on 4 of 20 possible areas, on 11 of which one or more wood ducks nested in wooden boxes.

Objectives: To collect comparative data on wood duck production, mortality, recruitment and nest box acceptance from several study areas in the state and to translate this information into sound wood duck management recommendations.

Procedures: Elevated starling proof nesting cylinders were checked at intervals varying from one to four weeks throughout the nesting season. Incubating hens were banded and young hatched in the boxes were web tagged for future identification.

Findings: Utilization of starling proof cylinders increased slightly in 1973 with 17 nest starts and 13 successful nests. A total of 136 wood ducklings were hatched from 203 eggs. In addition, a black duck utilized a wood duck cylinder at Bristol-Blake State Reservation and hatched at least four ducklings. The black duck was believed to be a hen release as part of Project W-42-R VII-2, Black Duck Imprinting Study (Table 1).

Nesting activity dropped this year with c linders used on only 4 of 20 possible sites versus 6 of 19 sites in 1972. However, 9 of the 20 areas involved in the study had no wood duck utilization at all, including Mill Pond, Littleton which had two nests in 1972, one in a cylinder and one in a standard nesting box.

Of the 15 nesting females handled, 12 were new, unmarked birds. One yearling web tagged in a cylinder was found nesting in a wooden box at Meadow Lea. All three of the return hens had nested in cylinders in 1971 and/or 1972. So far, there is no indication that wood ducks hatched in cylinders

Publication approved by Alfred C. Holland, State Purchasing Agent #5146

return to these cylinders to nest. The only web tagged birds found nesting in cylinders have been two sisters hatched in a wooden box at Fisk Mill Pond in 1970. They nested in cylinders on the area in 1971.

No starling nests have been discovered in the cylinders since the program's inception. Use of cylinders may have been higher on some areas if wooden boxes were not periodically cleaned out. For example, at Fisk Mill, one of five cylinders was used late in the season. However, there were 11 nest starts in 11 wooden boxes on that area. Two were unsuccessful because starlings built nests over the incomplete clutches. Only two hens were incubating prior to the start of the starling nesting season. In every other case, starlings built one or more nests in the boxes and would have limited production to no more than 6 nests. Had the boxes not been cleaned out every 10 to 14 days, the only available nesting sites would have been the metal cylinders.

Recommendations: Additional cylinders should be erected on areas where usage of the cylinders runs over 50 percent. Rain pipe predator guards should be placed on all cylinder setups. A number of cylinders on several areas should be elevated to prevent spring flooding and predator access.

Cylinders should be added to areas where starlings are a problem at present and cylinders should be used to replace wooden boxes on areas where no wood ducks presently nest but starlings do.

Edges of the cylinders should be bent up to prevent a wood duck from inadvertantly cutting itself on the edge when flying into the structure.

MASSACHUSETTS DIVISION OF FISHERIES AND GAME
Bureau of Wildlife Research and Management

Approved by _____
Colton H. Bridges

Title Superintendent

Prepared by _____
H.W. Heusmann
Waterfowl Biologist

Date _____

Table 1. Experimental Wood Duck Box Usage in Massachusetts

Area	Town	Number of Boxes				Nesting Attempt				Successful Nests			
		1970	1971	1972	1973	1970	1971	1972	1973	1970	1971	1972	1973
Onota Lake	Pittsfield	5	5	5	5	0*	0*	0*	0*	0	0	0	0
Cheshire Reservoir	Cheshire	10	10	10	10	0	0	0	0	0	0	0	0
Atwood Bog Reservoir	Carver	3	3	3	3	0	0	1	0	0	0	1	0
Mazzella's Reservoir	Carver	3	3	3	3	0	0[1]	0	0	0	0[1]	0	0
Great Cedar Swamp	Hanson	3	3	3	3	0	1	0	0	0	1	0	0
Kaplowsky's Reservoir	Duxbury	3	4	4	6	1	1	3	4	1	1	3	4
Meadow Lea Bog	Easton	3	6	9	10	2	5[2]	5[2]	8	2	4[2]	4[2]	6
Cutting's Pond	Stow	1	1	1	1	0*	0*	0	0*	0	0	0	0
Squannacook River	Groton	3	3	3	3	0*	0*	0*	0*	0	0	0	0
Bristol-Blake Sanctuary	Norfolk	2	2	2	2	0	0	0	0[3]	0	0	0	0[3]
Great Mill Pond	Concord	1	1	1	1	0*	0	0*	0*	0	0	0	0
Mill Pond	Littleton	1	1	1	3	0	0	1	0*	0	0	1	0
Beaver Brook	Littleton	5	5	4	4	0	0	2	4	0	0	2	2
Zanders Pond	Stow	1	1	1	1	0	0	0*	0	0	0	0	0
Fisk Mill Pond	Milford	3	3	5	5	3	3	1	1	2	3	1	1
Long Pond	Rutland	3	3	2	1	0	0	0	0	0	0	0	0
Chaffins Pond	Holden	3	3	3	2	0*	0*	0*	0*	0	0	0	0
Westboro Area	Westboro	3	3	3	3	0	0*	0*	0*	0	0	0	0
Cunningham Pond	Hubbardston	3	3	3	1	0*	0*	0*	0	0	0	0	0
Nipmuc School Pond	Mendon	0	0	0	3	-	-	-	0*	-	-	-	0
		59	63	68	67	6	10	13	17	5	9	12	13

* = No wood ducks nest on the area
1 = Plus one sparrow hawk nest
2 = Plus one hooded merganser nest
3 = Plus one black duck nest

JOB PERFORMANCE REPORT

State: Massachusetts

Cooperator: Massachusetts Division of Fisheries and Game

Project No. W-42-R-7 Project Title: Massachusetts Waterfowl Research Program

Job No. VI-1 Job Title: Waterfowl Inventory Flights

Period Covered: 15 November 1973 to 15 January 1974

Summary: Winter inventory flights were made on 8 and 14 January 1974. Coastal Massachusetts from the New Hampshire line to Rhode Island line was surveyed. The total waterfowl count of 127,043 was up 59.7 percent from 1973 and down 4.7 percent from the ten-year average. Black ducks were up 15.4 percent from 1973, down 7.5 percent from the ten-year average. Mallards, bay ducks, sea ducks and Canada geese were all up over 1973 counts. Only canvasbacks were down. Mallards, mergansers and buffleheads were up over the ten-year average while scaup and sea ducks were down. Goldeneyes were unchanged.

A mid-November 1973 flight revealed a delay in migration of sea ducks and goldeneyes although other populations were comparable to 1971 and 1972 counts.

Objectives: To inventory waterfowl populations throughout the fall and winter months and in conjunction with special or experimental waterfowl seasons.

Procedures: Two Cessna 172 aircraft were used to inventory waterfowl along coastal Massachusetts including Cape Cod and the Islands. Each aircraft was manned by a commercial pilot, a recorder and two observers. Data were tabulated by species and zones. Weather conditions, flight problems and visibility factors were recorded for each flight. The winter inventory data were submitted on standard forms to the Bureau of Sport Fisheries and Wildlife. Flights were made on 14-15 November 1973 and 8 and 14 January 1974.

Findings:

Winter Inventory Flights

In contrast to 1973, the weather prior to the winter inventory flight on 8 January was unseasonably mild. Two days of snow and one of freezing rain prevented completion of the second part of the inventory route until January 14 when temperatures had dropped to near zero for three days. As a result, although most fresh and brackish ponds were frozen over and there was floe

Publication approved by Alfred C. Holland, State Purchasing Agent #5146

ice on the rivers, bays and harbors were ice-free as were sections of salt marsh. All mussel flats were exposed insuring an ample food supply for black ducks as well as divers and sea ducks. An unusually good crop of sea lettuce was also available.

The species, numbers and location of waterfowl observed during the five-year period from 1970 to 1974 are presented in Table 1. A total of 127,043 waterfowl were observed. This compares with previous figures of 79,687 in 1973, an unseasonably cold period and 131,364 in 1972, an exceptionally mild period.

Table 2 persents data on the population change from 1973 and the previous ten-year average. Total waterfowl population for coastal Massachusetts was up 59.7 percent from 1973 and down 4.7 percent from the previous ten-year average. Black ducks were up 15.4 percent from 1973 but down 7.5 percent from the ten-year average. The coastal mallard population was up 172.5 percent over 1973 and 127.1 percent over the ten-year average. While the yearly change is great, more important is the ten-year increase since this species is becoming an important game bird in the state. Most populations are restricted; however, to inland sites.

The merganser population was up 95.1 percent over 1973 and 218.9 percent over the ten-year average. While relatively few in numbers, the increase in mergansers in recent years is important to diving duck and sea duck hunters. Scaup populations were up 38.3 percent over last year but still down almost 26 percent from the ten-year average. Goldeneyes continued to increase slightly in numbers as they have for the last four years. Although their numbers this year were up a fraction over the ten-year average, the population is not as high as it was during the first half of the 1960's. This may be due in part to misidentification of buffleheads in previous years. This year's bufflehead count was up 23.5 percent over 1973 and 134.6 percent of the ten-year average. However, it is my opinion that in past years, buffleheads may have been incorrectly identified as goldeneyes, leading to an inflated goldeneye count and a very low bufflehead count.

The sea duck count was up 102.9 percent over 1973 but down 6.8 percent over the ten-year average. Sea duck counts in Massachusetts are notoriously erratic. The main reason for the increase this year was due to a high eider count versus a very low count in 1973.

Table 1. Winter Inventory - New Hampshire Line to Cape Cod Canal, January 1974

Area	Year	Mallard	Black Duck	Scaup	Goldeneye	Bufflehead	Old Squaw	Scoter	Eider	Merganser	Canada Goose	Brant	Miscellaneous	Total
	1970		1,433	950	355	480		58			212			3,494
Salisbury to	1971	35	1,742	40	204	5	3	1,325	125		180			3,656
Wingaersheek Beach	1972	130	4,862	60	55	90		1,400	1,800		360			8,837
	1973	10	5,035	330	1,510				1,350		310			8,545
	1974	130	8,164	1,575	505	5		35	65		1,468			11,947
	1970		3,918	10	335	43		15	60	6	190			4,647
Cape Ann to	1971		525		135	24		115		2	37			838
Gloucester Harbor	1972	10	1,995		210	5		50	660	6	50			3,016
	1973		545		175	35		25	1,535	11	30			2,356
	1974	80	2,870		35	6			40	29	300			3,360
	1970		2,350	40	305	113		91	1,830	59				4,868*
Magnolia to	1971		360		131	37		970	5,120					6,618
Winthrop Standpipe	1972		605	3,090	375	90		470	4,995	21	10			9,656
	1973	15	695	2,660	385	46		1,080	7,165	15				12,061
	1974		160	70	469	130			15,080	22				15,926
	1970		1,396	1,635	1,022	48		55	17,257	19				21,439*
Winthrop Standpipe	1971	5	523	167	173	23		190	2,865	3	26			3,957
to Cohasset Beach	1972		1,083	6,640	122	15		735	850	2				9,447
Tower	1973	60	1,440	4,130	392	45		85	1,945	39				8,136
	1974		400	3,090	66	25		55	710	35				4,381
	1970	12	1,466		320	138		566	850	2	185			3,614*
Cohasset Beach	1971	40	1,084	99	137	15		203	1,023	3	305			3,109
Tower to Rocky	1972		4,027	30	70	10		326	17,220		1,541			23,224
Point	1973	40	2,270	30	75				525	7				2,947
	1974	50	2,677		89	80			8,835		1,400			13,131
	1970				32	18		67	551					668
Rocky Point to	1971	2	35		100			92	244					473
Cape Cod Canal	1972				5			330	780					1,115
	1973			25				60	485					570
	1974				20				910					930

Table 1 (Continued). Cape Cod to Mount Hope Bay, January 1974

Area	Year	Mallard	Black Duck	Scaup	Goldeneye	Bufflehead	Old Squaw	Scoter	Eider	Merganser	Canada Goose	Brant	Miscellaneous	Total
Cape Cod to Nobscusset Point	1970	30	1,010		25			80	915		515			2,575
	1971	10	974		10			60	1,825		1,059			3,938
	1972	10	299	16	50	42		834	1,888	9	503	20		3,671
	1973	55	2,223		57	16	10	30	1,218	20	568			4,197
	1974	74	1,821	5	49		12	10	1,460	22	470			3,923
Nobscusset Point to Great Island	1970		760		55	35		210	290		335			1,685
	1971	10	390		50	1		115	830		1,341	65		2,802
	1972	2	1,464		14	126	10	25	342		5,790	2,875		10,648
	1973		232		57	90	25	60	479	25		325		1,959*'
	1974	1	710		85	61	8	22	170	11	1,030	32		2,130
Great Island to Race Point	1970		10		25	25		10	360					430
	1971		292		25			15	105	65				512
	1972	2	1,286		63	12	10	234	709	32	25			2,373
	1973		145		50	38	2	60	272	10				602*
	1974	52	175		76	35		7	550	43		300		1,238
Nauset Light to Monomoy Point	1970		2,060		550			435	1,300	25	3,810	6		8,186
	1971	25	643		235	335		125	2,140	22	1,733			5,278
	1972	481	5,104	335	2,323	698		190	4,832	22	2,436		30 CB	16,771
	1973	37	3,314		350	365		250	2,200	10	1,851			8,377
	1974	145	1,239		125	503	100	115	14,795	10	2,856			19,888
Chatham to Buzzards Bay	1970	60	1,034	200	1,480	300		130	370	15	680		50 CB	4,319
	1971	135	542	1,245	585	195		134	2,408	18	534			5,769
	1972	16	573	538	905	80		4,910	1,660	11	115			8,808
	1973		548	655	1,230	650	18	135	1,565	114	645			5,560
	1974	399	279	4,050	2,335	730	36	1,090	8,032	310	607			17,920

Table 1 (Continued). Cape Cod to Mount Hope Bay, January 1974

Area	Year	Mallard	Black Duck	Scaup	Goldeneye	Bufflehead	Old Squaw	Scoter	Eider	Merganser	Canada Goose	Brant	Miscellaneous	Total
	1970	80	1,080	2,380	335	35		1,627		110	1,435			7,102
Mount Hope Bay	1971	24	317	3,283	340	73		990	180		425			5,632
to Taunton River	1972	10	585	4,500	245	8		27	35	20	1,397			6,827
	1973		550	940	95	5			40					1,630
	1974	10	559	4,390	120	300				25				5,404
	1970		442		405	362		10,005		3	60			11,297*
Quick Sand Point	1971	10	141	257	505	67		145	65	3	217			1,634
to Sconticut Neck	1972		635	1,915	949	175		1,365	2,800	3	45		2 CB	7,887
	1973		485	740	1,065	135		220	410	55	1,065		180 S	4,359
	1974	20	444	863	325	225			80	17	1,090		135 S	3,199

Table 1 (Concluded). Winter Inventory - Off Shore Islands, January 1974

Area	Year	Mallard	Black Duck	Scaup	Goldeneye	Bufflehead	Old Squaw	Scoter	Eider	Merganser	Canada Goose	Brant	Miscellaneous	Total
	1970	23	345	55	940	125		140	505	46	865			3,194
Martha's Vineyard	1971	94	758	370	458	217		1,209	1,135	69	1,117			5,457
and Elizabeth	1972	14	1,158	1,510	1,296	300		2,305	1,545	96	1,684		180 C	10,718
Islands	1973	158	1,015	515	1,300	569	123	1,595	1,735	153	943		239 S	8,492
	1974	102	1,644	25	2,987	175	45	1,465	3,192	461	843		89 S	11,138*
	1970	165	375		55	25		825	30,425	100	240			32,210
	1971	55	625	300	208	47		1,150	6,631	10	474		90 CB	9,590
Nantucket	1972		902	775	716	63	4	740	4,695	88	383			8,366
	1973	50	733	310	805	210	67	725	6,605	69	319		3 S	9,896
	1974	95	1,143	220	525	451	85	525	8,385	45	775		379	12,628

* Includes unknowns

CB = Canvasback; S = swans; C = coot

Table 2. Waterfowl Inventory Species Composition Breakdown and Percent Change from 1973 and Previous Ten-Year Average

Species	1974	1973	Percent Change from 1972	Ten-Year Average	Percent Change from Previous Ten-Year Average
Black Duck	22,185	19,230	+ 15.4	23,974	- 7.5
Mallard	1,158	425	+172.5	510	+127.1
Merganser	1,030	528	+ 95.1	323	+218.9
Scaup	14,288	10,335	+ 38.3	18,077	- 20.9
Goldeneye	7,806	7,546	+ 3.5	7,779	+ 0.3
Bufflehead	2,726	2,208	+ 23.5	1,162	+134.6
Sea Ducks	65,914	32,491	+102.9	70,718	- 6.8
Canada Goose	10,839	5,955	+ 82.0	9,630	+ 12.5
Canvasback	20	152	- 86.8	-	-
	125,966	78,870	+ 59.7	132,173	- 4.7

Table 3. November Coastal Aerial Counts

	Closed Coastal Season			Open Coastal Season		
Species	1973	1972	1971	1970	1969	1968
Black Duck	16,998	14,797	25,365	12,799	11,322	19,121
Mallard	632	890	813	839	389	493
Merganser	2,888	904	1,082	596	408	29
Scaup	5,193	6,698	23,163	4,209	14,925	19,605
Goldeneye	2,429	4,714	5,337	2,355	3,060	2,488
Bufflehead	1,750	1,575	921	341	2,014	271
Sea Ducks	19,736	62,684	54,264	50,543	45,718	21,350
Canada Goose	3,816*	7,253	6,828	2,456	2,129	5,378

* Statewide open season on Canada geese.

The following gives some idea of the variation that can be expected for the two most important types of sea ducks:

January Counts	1970	1971	1972	1973	1974
Scoter	4,177	6,848	13,941	4,717	3,324
Eider	54,713	24,699	44,891	27,529	62,304

It is apparent that while the scoter count was the lowest in five years, the eider count was the highest.

Canada geese were up 82 percent over 1973 and 12.5 percent over the ten-year average. While year-to-year counts are erratic, there has been a general trend upward in the Canada goose population in the last twenty years.

Mid-November Flight

The 1973 November flight (Table 3) was exceptional from the poinst of view that due to mild conditions in the north country, few migrants had left the breeding grounds. While the black duck count was comparatively high, the lack of migrant birds was evident from the sea duck count and, to a lesser extent, from the goldeneye and scaup counts. Canada goose numbers were also down but this may be a reflection, in part, of an open goose season on the coast, an area closed to goose hunting prior to the November flights in 1971 and 1972.

Recommendations: Winter inventory counts should be continued to provide trend data on wintering waterfowl populations. The November flight should be limited to Canada goose concentration areas and correlated with ground counts to provide needed data.

MASSACHUSETTS DIVISION OF FISHERIES AND GAME
Bureau of Wildlife Research and Management

Approved: _____
Colton H. Bridges, Superintendent

Prepared by: _____
H. W. Heusmann, Waterfowl Biologist

Date _____

PERFORMANCE REPORT
(Job Progress Report)

State: Massachusetts

Cooperator: Massachusetts Division of Fisheries & Game

Project No. W-42-R-7 Project Title: Massachusetts Waterfowl Research Program

Job No. VII-2 Job Title: Black Duck Imprinting Study

Period Covered: 15 January 1973 to 14 January 1974

Summary: Thirty-seven 'imprinted' black ducks were released at the Ipswich Audubon Sanctuary, Topsfield; 29 at Stony Brook Audubon Sanctuary, Norfolk, and 46 on M.D.C. Quabbin beaver ponds. Nests were established in two cylinders at Ipswich, three at Stony Brook and two at Quabbin. An estimate 57 eggs hatched 42 ducklings.

Hatching success of game farm blacks was low with only 115 birds reared to flight stage from 640 eggs. Black ducks remained on two of the three release areas throughout the reporting period.

Objectives: To develop a population of black ducks imprinted to nesting in above ground artificial nesting structures.

Procedures: Ducklings hatched from eggs of Delaware black ducks were used as breeding stock. Ducklings from these birds were hatched in incubators and then brooded for 40 hours in specially adapted nesting cylinders. Ducklings will be held overwinter in covered wire pens. Nesting cylinders will be present in the pens for further conditioning of the ducklings to the nesting structures.

Release of imprinted-conditioned ducklings will be made in the springs of 1973 and 1974 on selected sanctuaries where nesting cylinders have been erected during the previous winter.

Publication approved by Alfred C. Holland, State Purchasing Agent
#5146

Findings:

Spring Releases

The black ducks which were to be held for spring release were kept in the enclosed pool-pen at the Ayer Game Farm previously described (W-42-R-5 VI-2). During the winter 10 nesting cylinders were erected on three sites on the Ipswich River Audubon Sanctuary, Topsfield, 10 on the Bristol-Blake State Reservation--Stony Brook Audubon Sanctuary, Norfolk, and three cylinders were erected on each of five beaver ponds on the Prescott Peninsula of the Quabbin Reservoir, New Salem.

Nineteen female and 18 male black ducks were moved to a holding pen at the Ipswich Sanctuary in late February and held there until 7 April. They were then released into a fenced-in pond but were fully flighted and capable of leaving at will.

Fifteen female and 17 male blacks were placed in a holding pen at Bristol-Blake on 19 March and held until 10 April. During this time an unknown predator killed one bird of unknown sex by pulling it through the wire. Two other hens died of unknown causes.

Finally, 22 female and 24 male black ducks were released on a central beaver pond at Quabbin without a holding period. The release was made 3 April.

Field observation indicated that at Ipswich and Bristol-Blake many of the released birdsremained on the release areas for several weeks, gradually dispersing although at Bristol-Blake, at least a dozen birds remained throughout the Summer. At Quabbin, the birds left the release site within a few days. Connecticut Valley District Game Manager Peter Pekkala believed this was due to a lack of loafing sites on the release pond.

Black ducks established nests on all three release sites: two at Ipswich, three at Bristol-Blake and two at Quabbin (Table 1). While in general, hatchability was good, there were only three observations of broods; one female with a single Class IIb duckling at Ipswich and two broods of two and four ducklings at Bristol-Blake.

TABLE 1

BLACK DUCK NESTING DATA

Area	Town	Box Number	Number of Eggs	Number Hatched
Ipswich Audubon Sanctuary	Topsfield	6	11	2
Ipswich Audubon Sanctuary	Topsfield	2	7	7*
Bristol-Blake State Reservation	Norfolk	B	8	8
		I	9	9
		27	6	4
Quabbin Reservoir Pond	New Salem	X2	Unk(est.8)	all hatched
		X5	Unk(est.8)	(est. 4)
	TOTALS	7 Nests	Est.57	42

*includes 1 dead duckling left in cylinder

Findings: cont'd.

A number of other black ducks stayed on or around the release sites. It is not known whether these birds ground nested or did not nest at all. One black duck nest located on a beaver lodge was found on a nearby pond in Quabbin and a second nest was suspected but never located.

An attempt was made to color mark the female black ducks at Bristol-Blake prior to release. A commercial hair coloring was used unsuccessfully. The preparation used was described as flaxen blond but a single application to the ducks' tails produced only a rust color which was not identifiable beyond three meters(10 ft.).

Breeding Data

Eight good type females and 11 good males were segregated from the other blacks for separate breeding. These good ducks were so considered because they possess wing speculums free of any hint of white or buff anterior wing bar which might indicate a past infusion of mallard blood. These birds were selected from the progeny of similarly segregated birds. It is hoped the F3 young produced by these birds will represent pure black plumage types that can be used in mallard hybridization studies..

Ducks not released in the spring were held for breeding stock. An additional 54 adult black ducks were received from the Delaware Division of Fisheries and Game. These birds, were the remainder of Delaware's breeding stock used in a similar project.

The breeding stock produced 640 eggs. The eggs were gathered every 7 to 10 days and incubated artifically at the Sandwich Game Farm. Hatchability was poor and less than 115 birds were reared to flight stage. These birds were imprinted to nesting cylinders within a few hours after hatching and will be held at the Ayer Game Farm for release in the spring of 1974.

Findings: cont'd.

Fall - Winter Data

Eight banded black ducks were still present on The Ipswich Sanctuary the first week of January and more than 15 blacks remained at Norfolk. Weather had been unseasonably mild up to January. Both sanctuaries feed birds during the winter: captive crippled Canada geese at Ipswich and free-flying Canada's at Norfolk. No observations were made of black ducks on the Quabbin.

Vandals broke into the Ayer Game Farm waterfowl pen during October, 1973 and a number of black ducks escaped as a result. The number of missing birds was estimated at less than 20.

Recommendations: Releases of "imprinted" black ducks should be made on all release sites used in 1973 and on additional sites as the number of birds available permits. Different incubating techniques should be looked into in order to increase hatching success. Use of cooperators to trace brood survival on release areas should be considered.

Acknowledgements: The waterfowl staff wishes to thank Mr. and Mrs. Charles Thomas of the Stony Brook Audubon Sanctuary, Mr. Dick Mailey of Ipswich River Audubon Sanctuary, Mr. Charles C. Walker, Forester MDC, Quabbin, Mr. Paul Mahoney, Game Culturist, Ayer, Mr. John Prouty, Game Culturist, Sandwich for their cooperation on this project.

MASSACHUSETTS DIVISION OF FISHERIES

MASSACHUSETTS DIVISION OF FISHERIES AND GAME
Bureau of Wildlife Research and Management

Approved by _____
Colton H. Bridges

Title _____ Superintendent

Prepared by _____
H. W. Heusmann
Waterfowl Biologist

Date: _____

JOB PERFORMANCE REPORT

State Massachusetts

Cooperator: Massachusetts Division of Fisheries and Game

Project No. W-42-R-8 Project Title: Massachusetts Waterfowl Research Program

Job No. II-1 Job Title: Coastal and Inland Waterfowl Banding Winter Segment

Period Covered: 1 January 1974 to 15 March 1974

Summary: State personnel along with three cooperators banded a total of 1,917 ducks and coots at 30 locations using bait traps and/or cannon nets. Five hundred twenty-four ducks were banded as part of the regular winter black duck trapping program. Black ducks made up 78.4 percent of this total, mallards 12.4 percent and mallard X black duck hybrids 9.4 percent. The park mallard winter banding program netted 1,189 mallards, 33 black ducks and 165 mallard X black hybrids. Five American coot and 1 baldpate were also banded on inland sites.

Objectives: To band 1,000 wintering black ducks, the quota established for Massachusetts by the Banding Committee of the Atlantic Waterfowl Council; and to sample inland wintering waterfowl populations.

Techniques Used: Bait trapping stations for coastal black ducks were located in Cohasset, Westport, Buzzards Bay, Duxbury and outer Cape areas. Cannon net locations were established in the Boston Harbor area, on the Taunton River and at 10 inland sites. A bait trap was used at an eleventh inland site.

Baiting of trapping sites began after the close of the 1973-1974 waterfowl gunning season with actual trapping on the sites varying with response of the birds to the bait site. Trapping procedures were the same as described in Job Progress Report W-42-R, Job No. II-1 with the exception that popcorn kernels were used in place of whole kernel field corn on some inland sites. Records of all newly banded birds as well as return and foreign recoveries were re-

Publication approved by Alfred C. Holland, State Purchasing Agent #5146

corded on individual file cards and past records were up-dated on return birds. Federal banding schedules were submitted to the Bird Banding Laboratory

Findings:

Coastal Trapping

The winter of 1974 was moderate in temperatures continuing a four year trend. January was warmer than normal but February was colder. As a result of the mild temperatures in January, the coast was virtually ice free. February cold snaps did not last long enough to freeze over the mussel beds that black ducks forage on, and therefore, black ducks responded poorly to bait corn. As a result, trapping success on the coast was poor. Four hundred eleven black ducks, 65 mallards and 48 mallard X black hybrids were banded. (Table 1)

Black ducks made up 78.4 percent of the birds banded in 1974 (versus 81.9 percent in 1973 and 77.1 percent in 1972), hybrids comprised 9.4 percent (versus 7.5 percent in 1973, 11.1 percent in 1972) and mallards 12.4 percent (10.6 percent in 1973, 7.4 percent in 1972).

Inland Trapping

Success on inland sites was much higher. While the same mild temperatures that prevailed on the coast occurred inland, brief cold periods were sufficient enough to freeze over large sections of the inland ponds. Areas where it was necessary to set up a cannon net on the ice were given priority during such times, and sites where the net could be set up on land were visited in warmer weather. Advantage was taken of cold periods to trap two sites in one day. Since ducks at park sites were used to being fed by people, we did not have to contend with the availability of natural food supplies.

As a result 1,189 mallards, 33 black ducks and 165 mallards X black ducks were banded (Table 2). Also banded were 5 American coots and 1 baldpate.

Mallards made up 85.7 percent of the banded birds (versus 81.9 percent in 1973); hybrids comprised 11.9 percent (versus 15.2 percent in 1973) and black ducks 2.4 percent (versus 6.0 percent in 1973).

Table 1 Summary of Winter Coastal Trapping (Black Duck Trapping)

Area	Black Duck	Mallard X Black Hybrid	Mallard	Total
Boston				
Lynn Harbor	15	8	0	23
Wollaston Beach	26	15	0	41
Subtotal	41	23	0	64
Cohasset	8	1	22	31
Plymouth-Duxbury				
Standish Shores	59	8	1	68
Myles Standish Homesite	39	2	0	41
Eagle Nest Point	5	1	0	6
Subtotal	103	11	1	115
Westport				
Delano's	12	0	0	12
Hulda Cove	13	0	0	13
Subtotal	25	0	0	25
Buzzards Bay				
Canal Entrance	14	0	3	17
Wareham River	8	0	0	8
Peter Neck	12	0	0	12
Lewis Point	19	0	2	21
Weweantic River	50	0	0	50
Subtotal	103	0	5	108
Mid Cape				
Indian Trail	30	5	34	69
Outer Cape				
Town Cove #1 Orleans	26	3	2	31
Town Cove #2 Orleans	39	4	0	43
Briar Springs Orleans	31	1	0	32
Pochet Neck	5	0	1	6
Subtotal	101	8	3	112
All Areas Total	411	48	65	524

1974

Table 2 Summary of Winter Inland Trapping (Park Mallard Inventory)

Area	Black Duck	Mallard X Black Hybrid	Mallard	Total
Town Hall Pd. Wellesley	2	29	97	128
O. W. Field Park, Brockton	11	31	114	156
Forest Park, Springfield	0	10	104	114
Norumbega Park, Newton	7	13	146	166
Jenny Pd., Manomet	5	7	69	81
Flax Pd., Lynn	3	14	145	162
Cordage Park, Carver	1	9	113	123
Furnace Pond, Pembroke	1	13	168	182
Sidders Pond, Falmouth	0	4	36	40
Hobart Pond, Whitman	1	8	54	63
Assonet Neck, Berkeley	1	2	47	50
Clay Pit Pond, Belmont	1	25	96	122
Totals	33	165	1,189	1,387

Recommendations: Winter banding to meet black duck banding quotas established by the Atlantic Waterfowl Council Banding Committee should be continued in 1975. Further sampling of inland wintering sites should also be continued.

Acknowledgements: The personnel of the Division of Fisheries and Game wish to thank Mr. Taisto Ranta, town warden of Barnstable, Mr. H. Nickerson, deputy town warden, and Mrs. J. T. Gormely of Cohasset for their assistance in the banding program.

MASSACHUSETTS DIVISION OF FISHERIES AND GAME
Bureau of Wildlife Research and Management

Approved: _____
Colton H. Bridges, Superintendent

Prepared by: _____
H. W. Heusmann, Waterfowl Biologist

Date: _____

JOB PERFORMANCE REPORT

State: Massachusetts

Cooperators: Massachusetts Division of Fisheries and Game

Project No.: W-42-R-8 Project Title: Massachusetts Waterfowl Research Program

Job No.: II-1(2) Job Title: Coastal and Inland Waterfowl Banding (Preseason Segment)

Period Covered: 1 April 1974 to 15 October 1974

Summary: A total of 1,079 ducks and geese were banded during the preseason banding activities by Division personnel. This total includes 42 hand-reared common eiders, 105 hand-reared black ducks, 3 hand-reared wood ducks, 87 nest-trapped wood ducks and 4 hooded mergansers. Wild-trapped birds included 69 Canada geese, 152 mallards, 137 black ducks, 49 mallard X black hybrids, and 29 wood ducks. Park-trapped birds included 345 mallards, 8 black ducks, 41 mallard X black hybrids, and 8 mallard X domestic hybrids.

Objectives: To band a well distributed sample of coastal and inland waterfowl populations in accordance with quotas established by the Banding Committee of the Atlantic Waterfowl Council (1,000 each black ducks and wood ducks).

Procedures: Techniques used to capture waterfowl include nest box trapping, cannon netting, drive trapping, bait trapping, and mist netting. The mist netting technique employed 6, 12-m (39.4 ft.) long, 121-mm (4.75 in.) mesh nets. The 2-shelf, 2.6-m (8.5 ft.) high nets were supported by two piece 4.6-m (15.0 ft.) aluminum poles. The nets were erected facing various directions in order to attempt to cover a portion of the roosting site. Brush and shrubs were removed to make clear lanes for net erection. Division personnel were stationed in the vicinity of the nets to quickly remove any netted ducks.

Findings:

Hand-Reared

One hundred five hand-reared black ducks and mallard x black hybrids were released as part of Research Project W-42-R-8: VII-1, Black Duck Imprinting Study. Sixty-eight were released during March, 32 in April and 5 in September. Of the 105 birds released, 8 were mallard x black hybrids.

Forty-two common eiders were hand-reared by Philip Stanton of Upton, Massachusetts. Ten of these birds were released at Felix Neck Sanctuary, Martha's Vineyard on 21 August and 32 were released during May, July and August at Penikese Island in Buzzards Bay, Massachusetts.

Publication approved by Alfred C. Holland, State Purchasing Agent #5146

Three male wood ducks were hand-reared and released by Dick Turner of the Southeast District, Massachusetts Division of Fisheries and Game. The eggs were taken from an abandoned nest and hatched under a bantam hen.

Nest Trapping

While conducting wood duck production study project, W-42-R-8:IV-1 and IV-2, 87 wood ducks and 4 hooded mergansers were captured in artificial nesting structures and banded.

Goose Trapping

Sixty-nine Canada geese were captured and banded during June and July by the drive-trapping method. This operation was performed under the Gosling Transplant Program, W-42-R-8: W-42-R-8:V-1

Shore Bird Mist Netting

One hundred ninety shore birds were captured and banded by Lee McLaughlin, cooperating through the Division of Fisheries and Game. These birds were mist netted and banded at the Suasco Impoundment, Westboro, Massachusetts. Of the shore birds banded, there were 135 least sandpipers, 22 spotted sandpipers, 13 semipalmated sandpipers, 6 semipalmated plovers, 5 solitary sandpipers, 5 killdeer, 2 lessor yellowlegs, 1 western sandpiper, and 1 Baird's sandpiper.

Park Waterfowl

Night drive trapping was attempted at two park sites. The first attempt on 16 July at Norumbega Park resulted in capturing and banding 100 mallards, 4 mallard x black hybrids and 4 mallard x domestic hybrids. The second attempt was on 17 July at Town Hall Pond in Wellesley resulting in 16 mallards, 3 mallard x black hybrids and 1 mallard x domestic captured and banded. One hundred one previously banded birds were recaptured at Norumbega Park and 26 at Town Hall Pond in Wellesley.

Seven park sites were cannon netted once successfully except Horn Pond in Woburn which was netted twice. Second, unsuccessful attempts were made at Turners Pond, Milton and Forest Park, Springfield. Two successful cannon net shots were made at Look Park in Northampton during the same evening. Two hundred sixty-six waterfowl were captured and banded at the seven park sites (Table 1).

Table 1. Park Waterfowl Banding Sites

Area	Mallards	Hybrid Mallard X Black	Hybrid Mallard X Domestic	Black Duck	Total
Look Park Northampton	124	15		3	142
Turners Pond Milton	27	5	2		34
Town Pond Winchester	24	5		1	30
Mill Pond Danvers	14	5		2	21
Horn Pond Woburn	16	3		1	20
D. W. Field Park Brockton	14	1		1	16
Forest Park Springfield	10				10
Norumbega Park Newton	100	4	4		108
Town Hall Pond Wellesley	16	3	1		20
Total	345	41	7	8	401

Preseason Banding

Bait trapping was conducted at Great Meadows National Wildlife Refuge during September and October resulting in the capture and banding of 66 waterfowl consisting of 35 black ducks, 16 mallards, 6 mallard x black hybrids, and 9 wood ducks. Low water levels precluded bait trapping at Great Meadows during August.

Connecticut Valley District, Massachusetts Division of Fisheries and Game, personnel bait trapped 11 mallards, 3 black ducks and 4 wood ducks.

Ipswich River Audubon Sanctuary personnel bait-trapped and banded a total of 32 mallards, 31 black ducks and 12 mallard x black hybrids during September and October. Stony Brook Audubon Sanctuary personnel bait-trapped and banded 13 wood ducks, 6 mallards and 4 black ducks during September and October.

Two cannon net shots were conducted at Great Meadows National Wildlife Refuge. On 10 September 101 mallards, 19 mallard x black hybrids and 38 black ducks were banded. On 20 September the cannons misfired, resulting in only 3 mallards, 3 mallard x black hybrids and 1 black duck banded.

Mist netting for waterfowl was attempted twice at Mine Brook in Franklin, Massachusetts. The first attempt, 13 September, resulted in only 2 wood ducks and 1 black duck captured and banded. On 23 September, 2 mallards, 2 black ducks and 1 wood duck were captured. The evening flight began approximately one hour before sunset continuing until dark. This technique was unsuccessful in relation to the large number of man hours spent erecting and removing the nets and the number of birds captured.

Recommendations: Banding should be continued on a statewide basis. Increased assistance from District personnel and public and private agencies such as Massachusetts Audubon sanctuaries should be further explored. Attempts should be made to find other urban park sites where cannon netting can be successfully and safely done. Dirve trapping should be attempted at park sites with high numbers of waterfowl. Air boating should be resumed as it is an economical method of banding waterfowl. Mist netting for roosting ducks should be researched further to determine effectiveness on a catch-per-unit-effort basis and compared with other successful capture methods. Problems to overcome with mist netting are: (1) proper site selection in order to completely cover the roosting area with as few nets as possible; (2) erection of nets before roosting flight time and quick removal of netted birds for minimal disturbance of incoming flights; (3) nets and poles prepared beforehand for easier and quicker erection; (4) proper concealment of nets, poles, equipment, and personnel; and (5) possible use of decoys in the immediate vicinity of the nets to lure incoming birds.

Acknowledgment: The Division of Fisheries and Game wishes to express appreciation for the assistance and cooperation from Mr. and Mrs. Charles Thomas of Stony Brook, Massachusetts Audubon Sanctuary; Dick Mailey and Jim McDougall of the Ipswich River Massachusetts Audubon Sanctuary; Linda Gintoli and the staff of Great Meadows National Wildlife Refuge and members of the Western Massachusetts Duck Hunters Association.

MASSACHUSETTS DIVISION OF FISHERIES AND GAME
Bureau of Wildlife Research and Management

Approved: _____
Colton H. Bridges, Deputy Director

Prepared by _____
G. C. Thurlow, Assistant Game Biologist

Date _____

JOB PERFORMANCE REPORT

State: Massachusetts

Cooperator: Massachusetts Division of Fisheries and Game

Project No.: W-42-R-8 Project Title: Massachusetts Waterfowl Research Program

Job No.: IV-2 Job Title: Wood Duck Population Study: Evaluation of Starlingproof Nest Boxes

Period Covered: 1 April 1974 to 14 July 1974

Summary: Wood ducks successfully nested in 16 of 82 cylinders, producing 163 ducklings. Cylinders were used on 8 of 22 possible areas, 14 of which had concurrent wood duck usage in wooden boxes.

Objectives: To collect comparative data on wood duck production, mortality, recruitment and nest box acceptance from several study areas in the state and to translate this information into sound wood duck management recommendations.

Procedures: Elevated starlingproof nesting cylinders were checked at intervals varying from one to four weeks throughout the nesting season. Incubating hens were banded and young hatched in the cylinders were web tagged for future identification.

Findings:

Cylinders

Utilization of starlingproof cylinders increased noticably in 1974 with 27 nest starts on 8 areas compared to 13 starts on 4 areas in 1973. Of three new areas added to the study, one was used. Nest success, however, was lower than expected with only 16 of the 27 nests being incubated to term. These 16 nests produced 163 ducklings. In addition, a wood duck successfully used a black duck cylinder at the Ayer Game Farm pond in Ayer, Massachusetts. The black duck cylinder is a modified wood duck cylinder possessing a landing ramp and a half-open entrance instead of a one-third open entrance.

Most of the abandoned nests found in 1974 were on the Meadow Lea area in Easton. This area had a very high rate of usage. Fourteen out of 15 available wooden boxes were used by either wood ducks or hooded mergansers. Two boxes were used twice. Twelve of 14 cylinders were also used, one of which was used twice. However, there were only

Publication approved by Alfred C. Holland, State Purchasing Agent #5146

Table 1. Five- Experimental Wood Duck Box Usage in Massachusetts, 1970 to 1974

Area and Location	1970	19711	1972	1973	1974	1970	1971	1972	1973	1974	1970	1971	1972	1973	1974
Onota Lake, Pittsfield	5	5	5	5	5	0*	0*	0*	0*	0*	0	0	0	0	0
Cheshire Reservoir, Cheshire	10	10	10	10	10	0*	0*	0*	0*	0*	0	0	0	0	0
Atwood Bog Reservoir, Carver	3	3	3	3	3	0	0	1	0	1	0	0	1	0	1
Mazzella's Reservoir, Carver	3	3	3	3	3	0	0[1]	0	0	1	0	0[1]	0	0	1
Great Cedar Swamp, Hanson	3	3	3	3	3	0	1	0	0	0	0	1	0	0	0
Kaplowsky's Reservoir, Duxbury	3	4	4	6	8	1	1	3	4	5	1	1	3	4	4
Meadow Lea Bog, Easton	3	6	9	10	14	2	5[2]	5[2]	8	13	2	4[2]	4[2]	6	6
Cutting's Pond, Stow	1	1	1	1	1	0*	0*	0	0*	0*	0	0	0	0	0
Squannacook River, Groton	3	3	3	3	3	0*	0*	0*	0*	0*	0	0	0	0	0
Bristol-Blake Sanctuary, Norfolk	2	2	2	2	1	0	0	0	0[3]	0	0	0	0	0[3]	0
Grist Mill Pond, Concord	1	1	1	1	1	0*	0	0*	0*	0*	0	0	0	0	0
Mill Pond, Littleton	1	1	1	3	3	0	0	1	0*	1	0	0	1	0	1
Beaver Brook, Littleton	5	5	4	4	5	0	0	2	4	2	0	0	2	2	1
Zanders Pond, Stow	1	1	1	1	1	0	0	0*	0	0	0	0	0	0	0
Fisk Mill Pond, Milford	3	3	5	5	5	3	3	1	1	0	2	3	1	1	0
Long Pond, Rutland	3	3	2	1	0	0	0	0	0	-	0	0	0	0	-
Chaffins Pond, Holden	3	3	3	2	1	0*	0*	0*	0*	0*	0	0	0	0	0
Westboro Area, Westboro	3	3	3	3	3	0	0*	0*	0*	0*	0	0	0	0	0
Cunningham Pond, Hubbardston	3	3	3	1	2	0*	0*	0*	0	1	0	0	0	0	0
Nipmuc School Pond, Mendon	0	0	0	3	3	-	-	-	0*	0	-	-	-	0	0
Greenough's Estate, Carlisle	-	-	-	-	3	-	-	-	-	3	-	-	-	-	2
Delaney Site, Stow	-	-	-	-	2	-	-	-	-	0	-	-	-	-	0
Fletchers Pond, Stow	-	-	-	-	2	-	-	-	-	0*	-	-	-	-	0
	59	63	68	67	82	6	10	13	17	27	5	9	12	13	16

* = No wood ducks nest on the area
1 = Plus one sparrow hawk nest
2 = Plus one hooded merganser nest
3 = Plus one black duck nest

6 successful nests in cylinders; of the remaining 7 unsuccessful nests, 2 were random nests (only 2 eggs laid), 4 hens abandoned after being handled, and 1 hen abandoned before being handled. Of the remaining 4 nests on other areas, 1 at Greenough's in Carlisle was a random nest, and 1 at Kaplowsky's in Duxbury was unincubated, as was 1 at Beaver Brook, Littleton. The final nest at Cunningham Pond, Hubbardston, was abandoned before the hen was handled.

The high abandonment rate probably reflects the sensitive position of the wood ducks in the nesting cylinder. A wood duck that nests in a Division-erected box equipped with a predator guard cannot see anyone approaching the box nor can it observe activity on the marsh. When such birds are captured in the box, handled and returned, and given a period of time to settle down, they frequently remain in the box.

A hen incubating in a cylinder, however, can observe activity on the marsh while sitting on the clutch. When handled, such hens nearly always flush after being returned to the cylinder. These hens probably feel much less secure than they would if nesting in a standard box. The hen that abandoned after two and one-half weeks of incubation at Cunningham Pond flushed every time we checked other boxes on the area and may have been flushed by fishermen as well.

Of 16 nesting females handled, 7 were new birds believed to be nesting for the first time and 9 were birds that had nested in previous years. One bird that nested in a cylinder at Meadow Lea in 1973 used a wooden box in 1974 while a bird that used a box in 1973 at Greenough's used a cylinder in 1974. Nineteen seventy-four was the first year that birds hatched in cylinders were recorded nesting in cylinders. Both birds were hatched in 1973 at Meadow Lea and used cylinders in 1974. In 1973, a bird hatched in a cylinder the previous year was found nesting in a wooden box while two sisters hatched in a wooden box at Fisk Mill Pond, Milford in 1970 nested in cylinders on that area in 1971. To date, there is no indication that wood ducks hatched in cylinders readily return to cylinders to nest.

Experimental Light Lids

In conjunction with this project, a pilot study was conducted using standard wood duck boxes equipped with light-emitting lids. Six prototype lids were used, each with a hole cut in the top and covered with translucent plastic. The holes were of varying sizes, shapes and positions. The lids were placed on boxes in areas of high starling usage. Four of the six lids proved ineffective in preventing starlings from using the boxes. Two lids, however,

with center openings of 50 x 75 millimeters and 50 x 150 millimeters respectively, were apparently effective and prevented starling usage.

Recommendations: Additional cylinders should be erected on areas where cylinder usage runs over 50 percent. In the southeastern areas, wooden boxes should be gradually replaced by cylinders.

Web tagging of wood ducks should be curtailed to cut down on harassment. There is no evidence that wood ducks hatched in cylinders show more affinity for the structures as adults than do birds hatched in standard boxes.

A series of experimental "light" lids should be constructed with the opening ranging from 50 x 75 millimeters to 50 x 150 millimeters. These lids should be placed on both areas of high starling usage to determine their value as a deterrent to starling nesting and on areas of high wood duck usage to determine their acceptibility to wood ducks.

MASSACHUSETTS DIVISION OF FISHERIES AND GAME
Bureau of Wildlife Research and Management

Prepared by _____
H. W. Heusmann
Waterfowl Biologist

Date _____

JOB PERFORMANCE REPORT

State Massachusetts

Cooperator Massachusetts Division of Fisheries and Game

Project No.: W-42-R-3 Project Title: Massachusetts Waterfowl Research Program

Job No. IV-1 Job Title: Wood Duck Population Study: The Biology of Dump Nesting

Period Covered: 1 April to 15 October 1974

Summary: The placement of dummy eggs in wood duck boxes had no effect on nest initiation or nest attendance. There was no evidence that age of the wood duck was involved in utilization of dummy egg boxes.

Marking of wood ducks by a treadle-trigger automatic marking device utilizing orange, waterproof drawing ink failed due to the rapid wearing off of the ink stain on the bird. Attempts to mark birds with neck collars proved successful in 8 out of 31 attempts.

Wood duck production on 14 study areas was up 66 percent over 1973.

Procedures:

Dummy Egg Study

A total of 10 different study areas located in Norfolk, Middlesex and Worcester Counties were used during this three-year study. Beaver Brook, Littleton; Bristol-Blake State Reservation, Norfolk; and Breeding Pond, Webster were used in 1972. Three additional areas were added in 1973: Norfolk Correctional Institution, Norfolk; Long Pond, Rutland; and Turkey Hill Brook, Paxton. In 1974, Beaver Brook and Turkey Hill Brook were deleted but Cunningham Pond, Hubbardston; Buttrick's Estate and Estabrook Pond, Concord; and Greenough's Estate in Carlisle were added.

Each year of the study, the nest boxes were divided into two categories: those used at least once during the previous two years and those that were not. Dummy eggs were placed in half of the boxes in each category as selected by random sampling.

Each year, a stock of dummy eggs was created by hard-boiling pullet size, white chicken eggs and dying them with a mixture of commercial food coloring to simulate natural wood duck egg color. From each year's stock, an appropriate number of dummy eggs were selected based on wood duck egg

Publication approved by Alfred C. Holland, State Purchasing Agent #5146

shape. Three eggs were placed in each of the selected boxes and buried in shavings to simulate an active wood duck nest. All eggs were in place by mid-March, approximately two weeks before the first wood duck nests are traditionally initiated in central Massachusetts.

Automatic Color-Marking Device

The treadle-trigger color-marking device first used in 1972 was described in detail in report W-42-R-7, Job IV-1, 1973. A second device, designed by Assistant Game Biologist Richard G. Burrell, was first used in 1974. This device, like the first, consisted of a modified tunnel entrance predator guard (Figure 1).

The treadle-trigger color-marking device proved mechanically functional in 1973 field tests but no satisfactory marking solution was found. Lab tests involving alcohol-thinned, latex paint; 20 percent hydrogen peroxide; and a variety of Pelikan brand and Higgins brand drawing inks were made. The hydrogen peroxide did not adhere to the feathers of a taxidermist-mounted duck and drying and sealing of the dropper tip within 24 hours eliminated all other products except for Pelikan brand orange, waterproof drawing ink. This color was selected for further field testing. The use of various sized glass and plastic beads in the eyedropper did not prevent a seal from forming at the tip of the dropper. Droppers were also rigged with a wire running through the interior of the dropper with a wooden dowel floatation device on the end. We speculated that pressure on the bulb of the dropper would apply pressure to the floatation device, thus forcing the wire through any seal that formed at the tip of the dropper, liberating the fluid within. This was not the case after the lapse of 24 hours although it was successful in breaking seals that formed within 12 to 16 hours.

The second marking device tested in 1974 was a collar marker. An L-shaped, screw-threaded hook measuring 25 millimeters by 9 millimeters was screwed into each corner of a tunnel predator guard approximately 13 millimeters from the rear entrance (Figure 2). A rubber band to which a 15mm x 70mm vinyl tag had been stapled (material supplied by Safety Flag Co. of America, Pawtucket, R. I.) was stretched over the hooks. Either a standard 32 or 63 size rubber band was used for each test. When a wood duck passed through the predator guard, the band would slip over the bird's neck and snap off the hooks. Hooks were set up both facing the entrance and away from it. Initial tests were made using game farm wood ducks that were manually forced through the experimental predator guard. Nest boxes in the game farm pen were then rigged with experimental predator guards and the wood ducks allowed to mark themselves naturally. Field testing followed.

Figure 1

Predator Guard for the Wood Duck Nesting Box Used by Massachusetts Div. Fisheries and Game (for protection against raccoons)

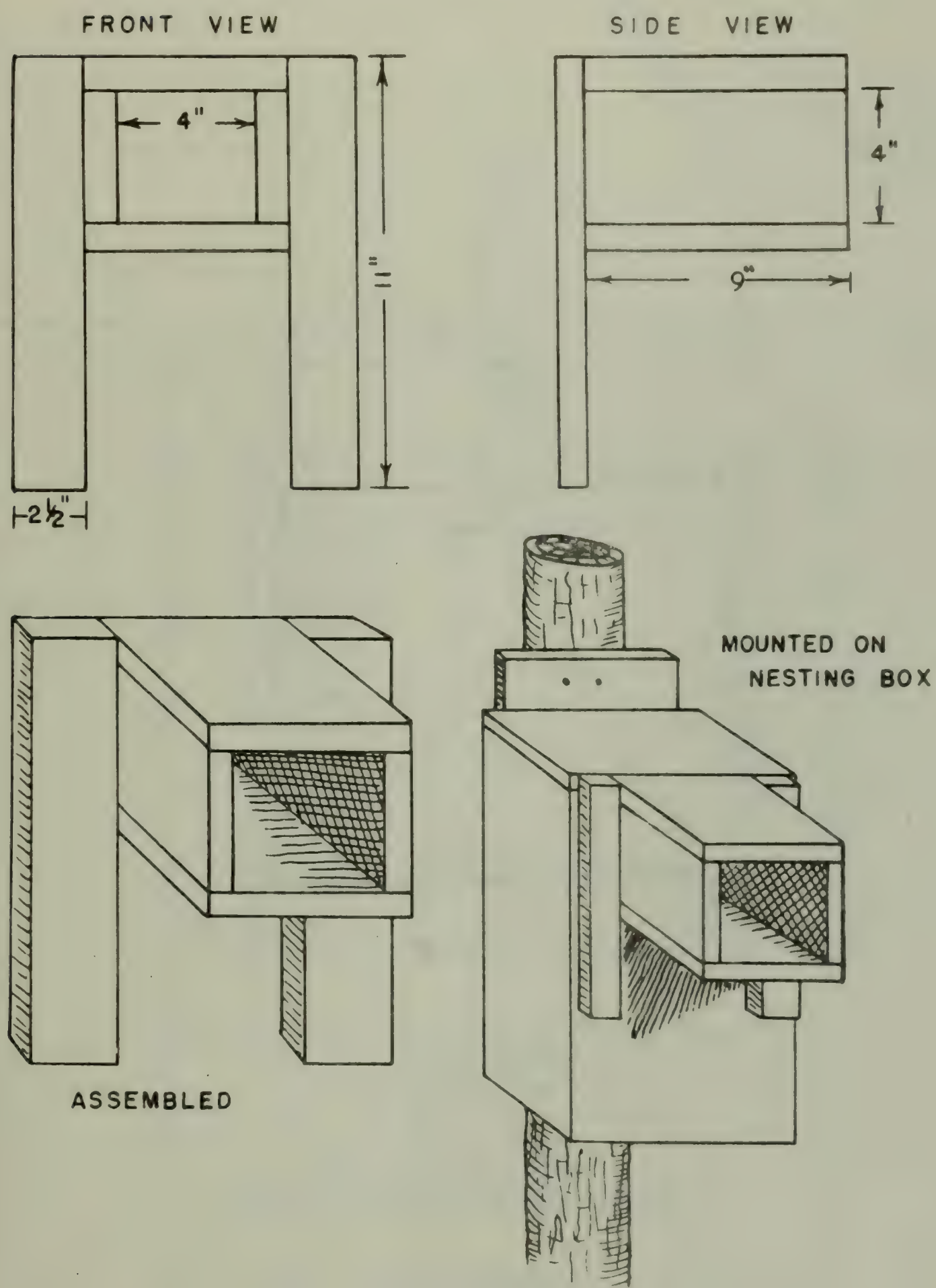

FIGURE 2

COLLAR MARKING DEVICE

(REAR VIEW OF PREDATOR GUARD)

NOTE:
LABLED PARTS ARE
ACTUAL SIZE

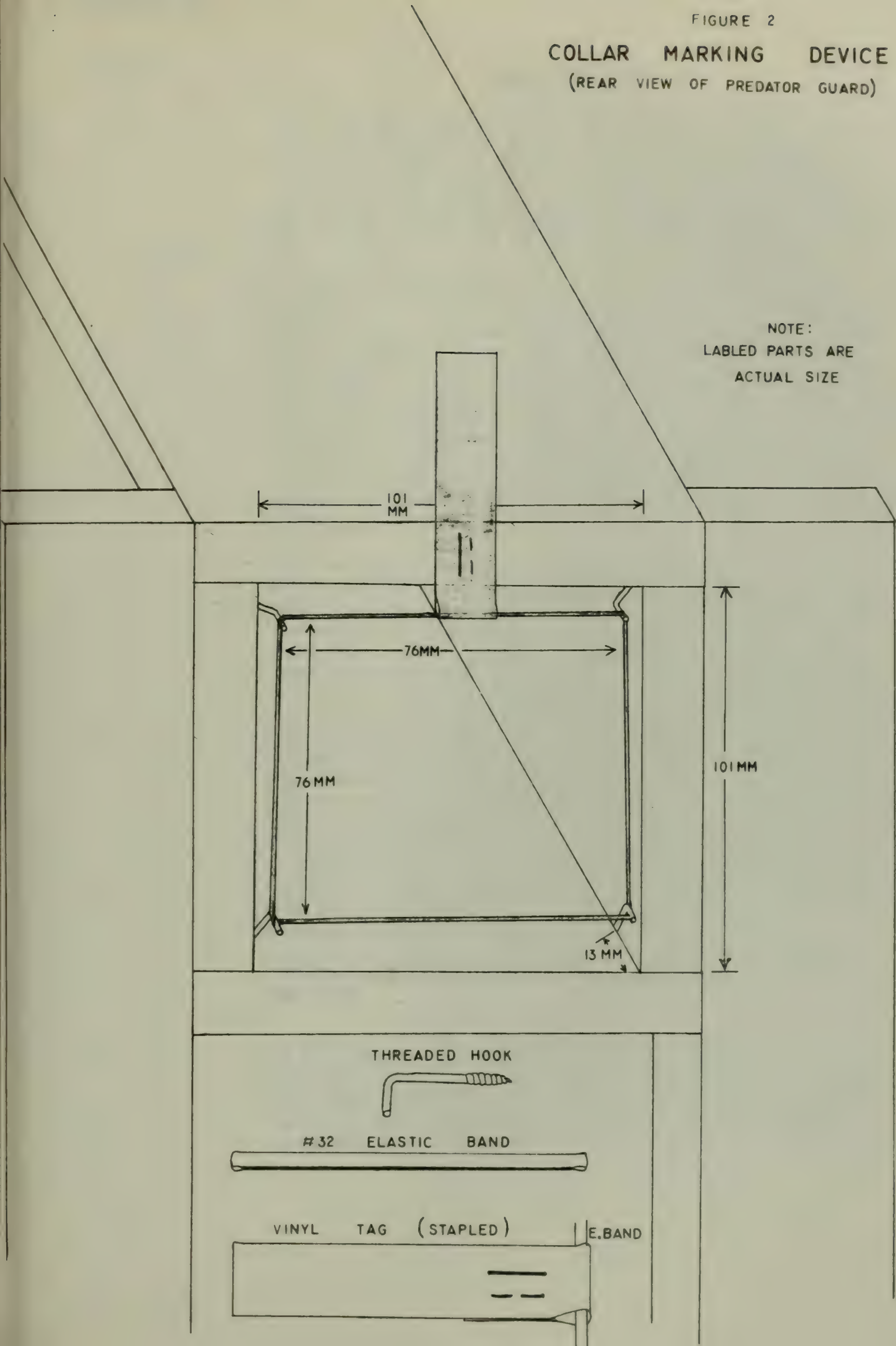

Findings:

Dummy Egg Study

Tables 1 and 2 present three years of data on nest initiation and nest attendance in control boxes versus dummy egg boxes. Using the control values as the expected, a Chi square test reveals no significant difference in nest initiation between the recent use (RU) control boxes (67.9%) and the RU dummy nests (68.1%) or between the no recent use (NRU) controls (57.7%) and NRU dummy egg boxes (51.0%).

In order to determine if the dummy eggs affected nest attendance (start of incubation) in any way, a comparison between nest starts and nests incubated was made. In this case, an expected value of 86 percent was used since records from the study areas in previous years as well as surrounding areas in current years indicate this to be the normal incubation rate. Again there was no significant difference between RU control nests (83.0%) and RU dummy egg nests (72.3%). The difference between NRU controls (86.7%) and NRU dummy nests (64.0%) was significant only at the 0.1 level. When the data is combined there is no significant difference.

This indicates that the prior presence of dummy eggs in nest boxes had no effect on wood duck nesting. Unfortunately natural dump nesting distorts these findings. Fifteen out of 53 (28.3%) nests in RU control boxes were known dump nests. Only 9 out of 47 (19.1%) nests in RU dummy egg boxes were dump nests. In the case of NRU control boxes, 9 out of 30 nests (30%) were dump nests while only 1 out of 25 NRU dummy egg boxes was a known dump nest. When the data for RU and NRU boxes are combined, the resulting difference between control and dummy egg boxes is significant. This may indicate that some wood ducks can tell the difference between dummy eggs and natural wood duck eggs and behave accordingly. Pettingill (1970), however, indicates that birds do not recognize their eggs as their own and will readily accept substitute eggs of different colors. Nest site is the important factor. If this is true for wood ducks, (Wood duck eggs mixed in with those of hooded mergansers are not uncommon. Either species may incubate such clutches.) then they may not have been able to distinguish dummy eggs from actual wood duck eggs.

In order to determine if past nesting experience of a duck was involved in whether or not a bird used a nest with eggs, incubating hens were captured and examined for bands. Birds were divided into known previous nesters, and (unbanded) probably first nesters. The ratio of new birds to old birds is as follows:

Table 1. Nest Initiation by Wood Ducks in Control and Dummy Egg Nest Boxes

	Recent Use Boxes				No Recent Use Boxes			
	Controls		Dummy Nests		Controls		Dummy Nests	
Year	Number Boxes	Number Nest Starts	Number Boxes	Number Nest Starts	Number Boxes	Number Nest Starts	Number Boxes	Number Nest Starts
1972	20	12	17	9	15	5	13	5
1973	21	9	22	12	15	6	15	4
1974	37	32	30	26	22	19	21	16
Totals	78	53	69	47	52	30	49	25
Percent Usage	67.9		68.1		57.7		51.0	

Table 2. Comparison of Wood Duck Nest Attendance in Control and Dummy Egg Boxes

	Recent Use Boxes				No Recent Use Boxes			
	Controls		Dummy Nests		Controls		Dummy Nests	
Year	Number Nest Starts	Number Nests Incu-bated	Number Nest Starts	Number Nests Incu-bated	Number Nest Starts	Number Nests Incu-bated	Number Nest Starts	Number Nests Incu-bated
1972	12	11	9	5	5	4	5	3
1973	9	8	12	12	6	6	4	3
1974	32	25	26	17	19	16	16	10
Totals	53	44	47	25	30	26	25	16
Percent Nest Atten-dance	83.0		72.3		86.7		64.0	

	Control Box	Dummy Egg Box
1972	7 new vs. 6 old	4 new vs. 2 old
1973	6 new vs. 6 old	8 new vs. 4 old
1974	25 new vs. 15 old	16 new vs. 12 old
	New birds = 58.5%	New birds = 60.9%

While the first two years of data indicate that new birds nest in dummy egg boxes at twice the rate of old birds, the data did not hold for the third year of study. The three year combined data indicate no significant difference between new and old bird usage of boxes.

Automatic Color Marking Device

The treadle-trigger marking device was tested on three nest boxes using Pelikan brand orange waterproof drawing ink. In one instance, the nest box was taken over by starlings causing the hen to abandon the nest. In the other two cases, the hens were handled but no mark was visible. The eye dropper was empty and a lack of ink stains inside the predator guards indicated that the hens had been marked. The mark, however, apparently wore off during the 3-1/2 to 4 weeks between marking and handling.

A total of 31 attempts were made to mark hens with neck tags. Eight attempts were successful. Twenty-seven attempts involved the use of hooks in predator guards described in the Methods section, two attempts involved hooks set in blocks of wood nailed on the inside of the entrance hole and two involved six hooks screwed directly into the holes of boxes with elliptical-shaped entrances.

Of the two attempts involving hooks placed on blocks of wood nailed inside the box, one tag was found in the box while in the second case the eggs were stolen causing the hen to abandon. The tag was missing and we do not know if the hen was tagged or not.

In the case of the elliptical holes, one nest was abandoned due to starling interference. The tag was gone. The second hen was tagged with a umber 63 rubber band.

Table 3 summarizes the results of the remaining 27 attempts. If the "nest disturbed" data is eliminated (since those hens were never handled), the success rate for size 32 bands is 37.5 percent versus 14.3 percent for the wider number 63 band. The wider band appears to be more difficult to pull off the hooks. It probably does not pull off cleanly but snags on one or more hooks, giving the hen a chance to escape being collared.

Table 3. Neck Collar Tagging Attempts

	Results	Rubber Band Size 32	63
1	Tagged	6	1
2	Hen unmarked, tag recovered	5	4
3	Hen unmarked, tag missing	4*	2
4	Nest abandoned, tag in box	1	0
5	Nest disturbed, tag missing	3	1
Total Attempts		19	8

* Three of the unmarked hens were incubating dump nests of 29, 21 and 18 eggs.

The problem of dump nesting hens distorts these findings. In three of four instances where the handled hen was unmarked, but the tag was missing, the hen was incubating a dump nest clutch. It is possible that a second hen may have been tagged. This was known to have occurred in one instance where a hen was found double tagged, one tag from her own box, and one from a nearby box that was a dump nest.

In one instance, a hen was known to be tagged but managed to slip the rubber band off before being handled. The tag was observed on the hen on two occasions by two different people but was found in the box when the hen was to be banded. The hen had abandoned the nest due to excessive disturbances.

Production Data

Incidental to the previously reported findings, a certain amount of production data was recorded. Nesting data for 14 eastern Massachusetts study areas are presented in Table 4. There were 115 nest starts in 235 boxes in 1974 compared to 64 starts in 213 boxes in 1973. Eighty-two successful nests produced 1,144 young compared to 689 ducklings produced from 57 nest starts in 1973. The 1974 production was the highest on record since data for all 14 areas was first compiled in 1967.

Production on other areas was also up or remained stable. Hooded merganser production increased slightly over previous years. There are no large nesting populations in eastern Massachusetts, but the number of areas with single nests has increased in recent years.

Both the increase in wood ducks and hooded mergansers continues a four-year trend of increasing production.

Recommendations: Attempts to find a marking solution which (1) remains free flowing for at least 36 hours; (2) is visible on the bird for at least five weeks, and (3) can be created in a variety of light colors should be continued.

Further marking studies with rubber band neck collars should be conducted, using size 31 rubber bands, each with an individually numbered tag.

Incidental production records should be kept in conjunction with other work of Project W-42-R, Jobs IV-1, IV-2, and VII-2.

Table 4. Wood Duck* Nesting Results for Massachusetts Study Areas, 1974.

Area	Number of Available Boxes	Number of Nest Starts	Number of Successful Nests	Number of Ducklings Produced
Great Meadows N. W. R.	33	16	12	138
Greenough's Estate	23	18	13	142
Estabrook Pond	13	14	10	137
Ayer Game Farm Pond	9	2	1	10
Buttrick's Estate	15	10	7	72
Breeding Pond	26	14(5)	13(2)	189(14)
Chaffins Pond	5	0	0	0
Fisk Mill Pond	17	9(1)	8(1)	116(10)
Nipmuc Pond	15	1	1	10
Long and Muddy Ponds	13	6(1)	6(1)	71(12)
Spruce Pond	10	0	0	0
Turkey Hill Brook	5	1	1	13
Westboro Management Area	12	0	0	0
Bristol-Blake Complex	39	34	23	246
Totals	235	115(7)	82(4)	1144(36)

Forty-nine percent (49%) of boxes were used.
Seventy-one percent (71%) of nest starts were successful.
Number of ducklings produced per successful nest was 13.9.

* Additional hooded merganser data in superscript ( ).

Literature Cited

Pettingill, O. S., Jr. 1970. Ornithology in Laboratory and Field. Burgess Publishing Co., Minneapolix, Minn. XVII + 524 pp.

MASSACHUSETTS DIVISION OF FISHERIES & GAME
Bureau of Wildlife Research and Management

Approved: _____
Colton H. Bridges, Deputy Director

Prepared by _____
H. W. Heusmann, Waterfowl Biologist

Date _____

JOB PERFORMANCE REPORT

State: Massachusetts

Cooperator: Massachusetts Division of Fisheries and Game

Project No.: W-42-R-8 Project Title: Massachusetts Waterfowl Research Program

Job No.: V-1 Job Title: Gosling Transplant Program

Period Covered: 1 April 1974 to 31 July 1974

Summary: Forty-two Canada goose goslings were transplanted to three sites in western Massachusetts during 1974; 2 to Williamstown, 24 to Chester and 16 to Ludlow. In addition, 24 adult, 1 yearling and 2 three-week-old goslings were banded and released on the capture site.

Three broods of geese from transplanted adults were noted as were 3 other broods of probable transplant origin. A number of other geese were also reported on or near transplant sites.

A paper reporting on the gosling transplant program in detail was presented at the 31st Northeast Fish and Wildlife Conference.

Objectives: To capture geese from locations where populations are large and increasing and to transplant and release them in areas of suitable habitat where there is a possibility of developing a harvestable population.

To develop techniques applicable at release sites which will induce geese to accept these release sites as permanent breeding grounds.

Techniques Used: Observations were made during June on several reservoirs and aqueducts in the Framingham-Southboro area to locate concentrations of geese. A single drive was made in Framingham utilizing men on shore and in canoes to herd the geese into a corner formed by a barn and adjacent fence.

A single drive was made in Carlisle where three broods of geese were captured by men on foot armed with dip nets. Two drives were made at the Bristol-Blake State Reservation utilizing men on shore and in canoes. The geese in this instance were herded into a previously erected drive trap constructed from old fyke net leads.

All geese captured were aged, sexed and banded. Returns were recorded. Morphological measurements were taken on adult geese.

Publication approved by Alfred C. Holland, State Purchasing Agent #5146

Transplanted birds were color-marked with orange and black plastic leg bands and with numbered orange plastic neck collars.

Findings: The pretrapping Framingham-Southboro goose census indicated that 162 geese (including goslings) were present during June of 1974. This compares with counts of 191 in 1973, 187 in 1972 and 159 in 1971. Only two broods totaling 7 goslings were observed in the Southboro Aqueduct flock this year. Constant removal of goslings from this flocks over the last six years has reduced flock size to 30-40 birds. Therefore, no transplants were made from this flock in 1974.

The first gosling drive (21 June) involved three broods of nuisance geese in Carlisle, Massachusetts. All ten goslings involved were captured. A pair of five-week-old goslings were transplanted to Bridges Pond in Williamstown. The others were held overnight in a pen where one bird was killed by a raccoon. The remaining seven birds were transported to Littleville Dam, Chester and released.

The second drive was made on the Framingham Reservoir, No. 1, 22 June. Three adults, all previously banded, and 17 goslings were captured. The goslings were moved to Littleville Dam, Chester along with the goslings from Carlisle.

Two drives were made on the Bristol-Blake State Reservation. This area is operated by the Massachusetts Audubon Society. A flock of approximately 50-60 geese are summer residents on the area with twice that number present during winter months. The flock was established originally by the release of crippled birds eight years ago. Feeding during the winter months attracted other geese. Presently five to seven broods of young are raised on the area annually. In order to hold down the flock's rapid increase, transplant operations were conducted on the area for the first time in 1974. The first drive on 8 July led to the capture of 2 goslings, 1 yearling and 17 adult Canada geese, 4 of which were previously banded. All the birds were banded and released. The second drive, made 10 July, resulted in the capture of 11 new adults and 16 new goslings. These 16 goslings were transplanted to Springfield Reservoir in Ludlow. Three of the return adult geese were originally banded as adults during Framingham drive-trapping operations in 1972.

Nesting Activities. Due to the gasoline shortage only one check was made of gosling transplant sites by Division personnel during 1974. However, at that time, names and addresses were recorded of residents on or near the release sites and stamped, self-addressed postcards were sent to these people with a cover letter requesting reports of color-marked geese or broods.

Cooperators reported that a pair of geese, of which one bird was banded, raised two of six young hatched on a private pond in Athol during 1973. The banded bird was believed to have been shot during the 1973 hunting season. A pair of geese again appeared on the pond during the spring of 1974, one of which was banded, but they left during the nesting season.

A pair of geese (female, orange-banded) with five young were observed by Division personnel on the South Ahtol Pond release site in 1974. The town Postmistress reported that a second pair of unmarked geese were located on the pond earlier in the spring but that one goose left when its mate was illegally shot. A third Athol cooperator reported that a pair of geese, of which one was color-marked, spent the spring on Lake Ellis. These are believed to be the South Athol Pond birds. He also reported that a banded bird raised four young on Lake Ellis in 1973. Division biologists observed four unmarked geese on the Lake this spring.

The only report of geese on the Quabbin Reservoir came from Division Wildlife Photographer Jack Swedberg who reported two pairs of geese with a total of 17 young , apparently the result of three or more nests. The adults were in the water and it could not be determined if they were color-marked or not.

In the western part of the state, a cooperator reported geese on Windsor Pond during the spring of 1974, but failed to mention numbers or color marks, while a second cooperator in Otis reported that a pair of Canada geese, of which one was banded, reared four out of five young on Watson Pond.

Division biologists observed two pairs of geese on Thousand Acre Swamp. One unmarked pair was alone. The color leg-banded female in the second pair was accompanied by five young. Pairs of geese were also reported in Sandisfield, Montgomery and Otis. Finally, Arnold J. Estille of the Corps of Engineers reported 23 of the 24 birds released at Littleville Dam were still present on the area as of 31 July 1974 and 5 other banded geese were located at the nearby Daville boat ramp.

There have been no reports of neck-collared geese since last fall. Apparently most of the geese transplanted last year had lost their collars by spring. There have been four cases where collars were removed from birds in distress by Audubon or sporting club members. The feasibility of continuing to neck collar goslings must be reconsidered.

A paper reporting in detail on the results of the gosling transplant program was presented to the 1974 Northeast Fish and Wildlife Conference in McAfee, New Jersey, and will be published in that Society's 31th Transactions.

Recommendations: Continue to transplant goslings from nuisance and potential nuisance goose flocks in 1975. Continue field observations to determine production of transplanted geese.

Acknowledgments: We wish to acknowledge the many cooperators who have engaged in this project making special mention of the Western Massachusetts Duck Hunters Association and Mr. and Mrs. Charles Thomas of the Stony Brook Audubon Sanctuary.

MASSACHUSETTS DIVISION OF FISHERIES AND GAME
Bureau of Wildlife Research and Management

Approved: _____
Colton H. Bridges, Deputy Director

Prepared by: _____
H. W. Heusmann, Waterfowl Biologist

Date _____

PERFORMANCE REPORT

State: Massachusetts Project Number: W-42-R-8

Project Type: Research

Project Title Massachusetts Waterfowl Research Program

Period Covered: 15 January 1974 to 14 January 1975

Study Number and Title: VI - Park Waterfowl Study

Study Objectives: To determine the ecology of waterfowl found in park situations and recreational values provided by such birds.

Job Title: VI-1 - Population Biology of Park Waterfowl Populations

Job Objectives: To determine the size and species composition of park waterfowl populations, their location, movements, biology and population dynamics.

Summary: A summer park waterfowl census of the greater Boston area was conducted. A total of 2,071 mallards and 248 black ducks was observed on 56 different areas (40 percent of available sites). The summer count was approximately 56 percent of a winter count conducted on the same geographic area during January 1973. A total of 1,795 park waterfowl was banded during 1974 under W-42-R:II-1.

Target Date for Completion of Job Objectives: 31 October 1979.

Status Progress: Ahead of banding schedule, on schedule for other phases.

Deviation in Progress: Moderately cold winter conditions improved waterfowl response to baiting and purchase of a new small cannon net allowed banding on a wider range of sites.

Recommendations: Banding of park waterfowl under Job II-1 should continue during both winter and preseason segments. Brood counts should be made in the greater Boston area during mid-May and early July 1975.

Cost: (Excluding banding activities)

Labor	$ 990
Mileage	$ 144
Total Cost (Approx.)	$1134

Remarks: Job 1. Population Biology of Park Waterfowl Populations

During the period 29 July to 2 August 1974, a ground census was made of all existing wetlands in the greater Boston metropolitan area as delineated by Massachusetts Highway 128. This area consists of approximately 323 square miles (837 sq. kilometers). Location of wetlands was determined primarily by use of 7-1/2 minute series U. S. Geological

Publication approved by Alfred C. Holland, State Purchasing Agent #5146

Survey topographical sheets. When newly created wetlands were known to exist they were also checked. Only areas indicated on the maps as possessing areas of open water were checked. Rivers and brooks could only be spot checked in areas where ducks were likely to congregate. Each spot check was counted as one area. All checks were made from vehicles or on foot except for the Norumbega Park section of the Charles River where a canoe was used.

Two crews of two men each were employed each day of the census. Checks were run from 9:30 A.M. to 3:00 P.M. each day of the survey.

Spot checks were made at 182 areas indicated as wetlands on U.S. topographic sheets; 143 areas were still in existence. At least one duck was observed on each of 57 (40%) of the existing areas. Mallards were found on 53 areas (37%) and black ducks on 27 areas (19%). One American wigeon, seven wood ducks, a number of Canada geese and one unidentified grebe were found in association with blacks and/or mallards but none were found on areas where blacks and mallards were not found.

A total of 2,071 mallards and 248 black ducks were counted in the greater Boston metropolitan area. The number of ducks on the areas ranged from 1 to 311. The flock sizes ranged as follows:

1- 3 ducks	-	8 areas
4- 10 ducks	-	12 areas
11- 25 ducks	-	11 areas
26- 50 ducks	-	11 areas
51-100 ducks	-	10 areas
101 plus ducks	-	5 areas

The largest flocks of ducks were on the Charles River in the vicinity of Norumbega Park, Newton (311); Mill Pond, Winchester (216); Boston Public Gardens (170); Flax Pond, Lynn (110) and Brookline Reservoir, Brookline (101). Only two large concentrations of black ducks were discovered; one flock of 39 blacks was located at Breeds Pond, Lynn, and only black ducks were present. The second concentration was located in the Forest Hills Cemetery in Boston where 42 black ducks and 40 mallards used a pond as a resting area.

While lateness of the season precluded extensive brood observations, 69 locals comprising of 19 broods were recorded. Other juveniles that had reached flight stage could not be separated from adults by field observation. Fifteen of the 19 broods could be segregated into individual broods. Brood sizes were as follows:

Brood Size	Number of Broods
1	3
2	4
3	2
4	1
5	2
6	1
8	1
9	1

The preponderance of small broods agrees with data from New Jersey where suburban mallards in lagoon settings raised fewer ducklings than did wild mallards despite laying larger clutches (Figley 1974). The later broods may also be the result of renesting when clutches are usually smaller. Broods varied in age from Class Ic to IIIa. Older juveniles could not be identified. The broods, consisting of eight and nine ducklings, were Class IIa. Most of the smaller broods were older ducklings.

In general, only one brood was seen on an area. The 19 broods were found on 14 different areas. This is probably a reflection of the lateness of the season when older broods were no longer identifiable as such, but may also reflect territorial behavior which limits production on small areas. The one area where four broods were observed was long the Charles River in Newton. A total of 20 local ducklings were present although a cooperator reported observing at least 55 ducklings three weeks earlier.

A comparison was made of the summer 1974 findings with census data from the winter of 1973. During January of 1973 in the same geographic area, a total of 3,443 mallards and 687 black ducks were counted. The winter survey was not as intensive as the summer survey but since many areas were frozen over probably few areas harboring ducks were missed. Assuming the same 143 areas were available to ducks (barring ice conditions) 22 percent (32) of the areas were used by mallards and 13 percent (19) by black ducks in the winter. Flock sizes ranged from a low of 10 to a high of 550. Many areas with summer flocks had had larger winter flocks but some summer areas, including two of the largest (Boston Public Gardens and Brookline Reservoir) were frozen over and harbored no waterfowl during January 1973. On the other hand, an area in Beverly had 25 mallards and 4 blacks on it during this summer census but harbored 460 mallards and 90 blacks when censused during the winter of 1973. A few areas with no summer ducks are used as wintering areas.

There were 40 percent fewer mallards and 64 percent fewer black ducks observed in the greater Boston metropolitan area during this summer census than were observed during the 1973 winter census. Part of the winter increase is the result of ducks produced outside the Boston area utilizing the parks as wintering areas but some ducks produced outside of Massachusetts must also winter in the parks.

PERFORMANCE REPORT

State Massachusetts Project Number: W-42-R

Project Type: Research

Project Title: Massachusetts Waterfowl Research Program

Period Covered: 15 January 1974 to 14 January 1975

Study Number and Title: VI Recreational Values of Park Waterfowl Populations

Study Objectives: To determine the ecology of waterfowl found in park situations and recreational values provided by such birds.

Job Title: VI-2 - Recreational Values of Park Waterfowl Populations

Job Objectives: To determine the value of park waterfowl populations in economic and recreational terms.

Summary: Limited park visitor interview data was collected during the winter of 1974 at three park situations. Sample size was too small to draw conclusions.

Target Date for Achievement of Job Objectives: 31 December 1976, but beginning dropped as of this date.

Status of Progress: Behind

Significant Deviations: The college students assigned to collection of data on a voluntary basis failed to meet the guidelines put down by the project leader. Data collection was minimal.

Recommendations: Since this job promises to be of little direct benefit to the sportsmen paying for the research, this job should be dropped until such time that a separate source of funds becomes available for research of this nature.

Cost: Project leader's labor - $75

Remarks: Job 2 - Recreational Values of Park Waterfowl Populations

Three parks were chosen for concentrated winter census work: Adams Pond, Westport; Town Hall Pond, Wellesley; and Norumbega Park, Newton. Each area was to be sampled on two Saturdays, two Sundays and eight weekdays. All interview work was to be conducted by students from Framingham State College. The students were enrolled in an ecology course taught by Philip Stanton. The interview period was to extend between 15 December 1973 and 15 February 1974. Interview days ran between 9:00 A.M. and dusk (about 5:00 P.M.). Prepared questionnaire forms were distributed to the students.

Publication approved by Alfred C. Holland, State Purchasing Agent #5146

An apparent misunderstanding coupled with a failure on the part of some students to submit data resulted in a limited number of interview days reported.

There were 300 to 350 ducks present on Adams Pond in Westport but very few people fed the ducks. However, two parties came daily to feed the ducks, occasionally twice daily. The one party brought 20 pounds (9.1 kilograms) of corn each time while the second brought 15 pounds (6.8 kilograms). The town river warden supplied the corn that one of the parties fed. He estimated that the ducks ate 350 pounds (158.9 kilograms) of corn a week during winter months. The greatest number of people to visit the pond in any one day occurred on a Sunday when 12 people came to feed or watch the ducks.

Norumbega Park was sampled on only a single weekend. On Saturday, 12 January 1974 (clear day, temperature in the 20's F°), a total of 106 adults and 42 children, forming 67 parties, visited the park to feed and/or observe the ducks. Only 25 of the parties were made up of both children and adults. The remaining 42 parties comprised of adults only. Somewhat surprisingly, only 20 of the parties fed the ducks and then it was sparingly (12.5 lbs. or 5.7 kilograms of food, almost all of it bread). A previously conducted summer interview indicated that two-thirds of park visitors fed the ducks (Heusmann and Burrell 1974). This lack of feeding was perhaps reflected in the following day's duck population. While observers estimated 250 to 300 ducks at Norumbega on Saturday, on Sunday the population was down to 100.

On Sunday, 13 January (partly cloudy, temperatures 5-15° F) 127 adults and 52 children comprising 88 parties visited Norumbega. Thirty-one of the parties were made up of adults with children, the rest consisted of adults only. The number of feeders was up over the previous day with 61 parties feeding the ducks but total food fed was low with only 18.1 pounds (8.2 kilograms) of food (16.7 pounds or 7.6 kilogram of bread) fed. The Norumbega birds are not regularly fed by any organized concern although one bakery owner brings his leftover products twice a week year-round. This amounts to anywhere from 25 to 120 or more pounds (11.3 to 54.5+ kilograms) of doughnuts a week. The degree of feeding by park visitors observed over the weekend is probably not sufficient to maintain a flock of 300 ducks and therefore the data is probably not representative of a typical winter weekend.

At Town Hall Pond in Wellesley, the ducks are regularly fed corn by the town park department as well as by park visitors. An interchange of Wellesley and Newton birds occurs but not to any great degree. The Wellesley area was sampled on three days during the winter interview period and once the first of May. The data are presented

Table 1. Winter park interview data, Town Hall Pond, Wellesley, 1974.

Date	Number of Visitors		Number of Parties			Number of Parties		Pounds of Food Fed
	Adults	Children	Adults	Adults and Children	Children	Feeding	Observing	
Sat., 12 Jan.	33	18	12	9	0	15	6	17.7 (8.0 kg.)
Thurs., 24 Jan.	34	48	16	8	2	19	7	17.7 (8.0 kg.)
Fri., 15 Feb.	16	14	5	6	3	7	7	44.2 (20.1 kg.)
Wed., 1 May*	49	86	28	10	5	20	23	12.3 (5.6 kg.)

* Not part of Winter Interview data.

in Table 1. The large amount of food fed on 15 February is due to a feeder bringing 25 pounds (11.3 kilograms) of corn to the ducks. Since the park department feeds the birds, the population (100-150) remains stable despite the feeding or lack of feeding by park visitors.

In all three parks, most of the visitors stayed for less than 15 minutes and most came from the town in which the park was located or a bordering town. In the three weekend days sampled at Norumbega and Town Hall Pond, 41 percent of the people interviewed indicated that they came to the park less than once a month while 23 percent indicated they visited the park at least twice a week. For the two winter weekdays sampled at Town Hall Pond, these percentages were 27 and 18 percent but the sample size is too small to draw any conclusions.

Banding of park waterfowl is carried out under Job Number II-1, Coastal and Inland Waterfowl Banding. During the winter of 1974, 1,189 mallards, 33 black ducks and 165 mallard x black hybrids were banded in park situations. Also banded were 5 coot and 1 baldpate. Most of the banding was accomplished by cannon netting although a bait trap was used at Town Hall Pond, Wellesley.

The preseason trapping program resulted in the banding of 345 mallards, 8 black ducks, 41 mallard x black hybrids and 8 mallard x domestic hybrids.

MASSACHUSETTS DIVISION OF FISHERIES & GAME
Bureau of Wildlife Research and Management

Approved: _____
Colton H. Bridges
Deputy Director

Prepared by _____
H W Heusmann
Waterfowl Biologist

Date _____

Literature Cited

Figley, William K., III. 1974. The significance of suburban lagoon developments as waterfowl habitat. M.S. thesis. State Univ. of New York, Syracuse. 157 pp.

Heusmann, H W and Richard G. Burrell. 1974. Park mallards In Symposium on wildlife in an urbanizing environment. Coop. Ext. Serv., Univ. of Mass., Amherst. 182 pp.

JOB PERFORMANCE REPORT

State: Massachusetts

Cooperators: Massachusetts Division of Fisheries and Game

Project No.: W-42-R-8 Project Title: Massachusetts Waterfowl Research Program

Job No.: VII-1 Job Title: Black Duck Imprinting Study

Period Covered: 15 January 1974 to 14 January 1975

Summary:

A total of 46 female and 55 male black ducks were released the spring of 1974 on three different areas. Nine nests in cylinders were found, some of which were known to be clutches of 1973 released birds. All but one nest was successful.

Approximately 200 black ducks and 60 wood ducks were reared to flight stage for 1975 releases.

Objectives:

To develop a population of black ducks imprinted to nesting in above-ground artificial nesting structures.

Procedures:

Ducklings hatched from eggs of Delaware black ducks were used as breeding stock. Ducklings from these birds were hatched in incubators and then brooded for 40 hours in specially adapted nesting cylinders. Ducklings will be held overwinter in covered wire pens. Nesting cylinders will be present in the pens for further conditioning of the ducklings to the nesting structures.

Release of imprinted, conditioned ducklings will be made in the springs of 1974 and 1975 on selected sanctuaries where nesting cylinders have been erected during the previous winter.

Findings:

Spring Releases

Thirteen female and 16 male black ducks were placed in a holding pen at Bristol Blake State Reservation, Norfolk, on 6 March 1974. The pen was partially destroyed during a windstorm on 10 March and about half the ducks escaped. On 15 March, 5 more females and 6 males were added to the remaining flock. The birds were liberated the first week of April although a feeder was provided on the release site and was readily used by many of the ducks.

Thirteen female and 16 male black ducks were also placed in a holding pen on the Ipswich River Audubon Sanctuary, Topsfield, on 7 March and released the first week in April while 15 female and 17 male blacks were released on 4 April on a Quabbin Reservoir beaver pond without

Publication approved by Alfred C. Holland, State Purchasing Agent #5146

subjecting the birds to a holding period. The Quabbin birds were also provided with a feeder with approximately 50 pounds of pelleted food. The birds used the feeder until it was empty.

Black ducks established nests at all three release sites; however, limited handling of the birds prevented an accurate determination of which nests were the result of the 1973 release and which nests were those of 1974 released birds. At the Ipswich Sanctuary, two nests were successfully hatched off by ducks that, due to the early date of hatch, would not have been 1974 birds, although in both cases the clutches were hatched and gone before the first check for nests was made. A third nest of Ipswich was from a 1974 released bird; in this case, a female originally hatched in Delaware and held at the Ayer Game Farm three years.

There were four nest attempts at Bristol Blake. One successful hatch involved a 1973 released female while in two other successful nests the hens were not handled. The third attempt involved a late nest of a 1974 released hen, possibly a renest. The hen abandoned the nest after a period pf prolonged incubation. The black ducks released at Bristol Blake during the last two years have remained very tame and can be closely approached. Visitors to the sanctuary occasionally feed the birds bread. A flock of 13 to 16 male black ducks remained in the immediate vicinity of the release site all summer. No females were present in this flock during the nesting season indicating that some of the released females may have established ground nests.

There were three nests in cylinders in Quabbin beaver ponds. None of the hens were handled, but probably were 1974 released birds. One nest was located on the release pond while the other two were located on separate surrounding ponds. All were successful. Table 1 summarizes nesting results.

Game Farm Production Data

Approximately 935 eggs were produced by game farm-held black ducks during 1974. Fertility of eggs laid early in the season was low, possibly due to a limited number of male black ducks (sex ratio - one male to six females). Fertility improved after some females began incubating eggs, reducing the number of females available for copulation. A faulty incubator resulted in almost total egg loss of the first clutches set. Eggs were then placed in forced air hatching units with better results. Embryo mortality proved to be high with many ducklings reaching term but either never pipping the egg or failing to completely hatch out. Duckling mortality was also high, possibly due in part to crowding although inclement

Table 1. Black duck nesting data.

Area	Town	Box Number	No. of Eggs	No. Hatched
Ipswich Audubon Sanctuary	Topsfield	E	8*	8
		F	7*	6*
		I	8	6*
Bristol Blake State Reservation	Norfolk	B	8	0
		D	9	9
		E	10	10
		J	8	8
Quabbin Reservoir Beaver Ponds	New Salem	X1	7*	7*
		X7	6*	5*
		X4	5*	4*
	Totals		76	63

* Minimum estimate.

weather was responsible for the loss of approximately 25 older ducklings held in outside pens. In all, 201 incubator-hatched black duck were reared to flight stage while approximately a dozen more were reared by their natural mothers within the breeding flock pen. All these birds will be held for release in the spring of 1975.

In addition to the black ducks reared, approximately 65 wood ducks were raised to flight stage. Originally, eggs were collected and incubated (135) but hatching success was low and duckling mortality high. Only 8 incubator birds reached flight stage. The adult wood ducks were then allowed to hatch off their own young and rear them in with the breeding blacks and wood ducks. Eight nesting hens raised over 55 ducklings to flight stage. A number of these wood ducks will be released on selected areas next spring that have been equipped with nesting cylinders.

Baldpates held at the Sandwich Game Farm were separated into pairs and placed in individual runs. Six pairs were successful in producing and rearing approximately 35 young to flight stage. Some of these birds will be released the spring of 1975.

Recommendations: Due to the relatively poor usage of cylinders by released black ducks, final release of the remaining game farm birds should be made the spring of 1975. Only enough birds should be held as breeding stock to form a nucleus of a new flock should the use of cylinders increase significantly during the 1975 season. No attempts at artificial incubation should be made but natural incubating within the pens should be encouraged and steps taken to insure survival of any young that may hatch.

Attempts should be made to handle all incubating hens on study areas to determine the origin of the birds. Production records should be kept.

Acknowledgments: Division personnel wish to extend their thanks to Mr. and Mrs. Charles Thomas of the Stony Brook Audubon Sanctuary, Mr. Dick Mailey of the Ipswich River Audubon Sanctuary and Mr. Charles C. Walker, Forester, Metropolitan District Commission, Quabbin, for their cooperation on this project.

MASSACHUSETTS DIVISION OF FISHERIES AND GAME
Bureau of Wildlife Research and Management

Approved: _____
Colton H. Bridges, Deputy Director

Prepared by: _____
H W Heusmann, Waterfowl Biologist

Date _____

JOB PERFORMANCE REPORT

State: Massachusetts

Cooperators: Massachusetts Division of Fisheries and Game

Project No.: W-42-R-8 Project Title: Massachusetts Waterfowl Research Program

Job No.: VIII-1 Job Title: Waterfowl Inventory Flights

Period Covered: 15 November 1974 to 15 January 1975

Summary: Winter inventory flights were made on 8 and 15 January 1975. Coastal Massachusetts from the New Hampshire line to the Rhode Island line was surveyed. The total waterfowl count of 120,278 was down 5.3 percent from 1974 and 2.8 percent from the 1970-1974 average. Black ducks were down 28 percent from 1974 and 26 percent from the 10-year average. Sea ducks were up 13 percent from 1974 but down 13.6 percent from the 10-year average. Canada geese were up 31 percent over last year and 43 percent over the 10-year average. Mallards, mergansers, scaup and bufflehead were up over 1974 figures and the 10-year average while goldeneyes were down slightly but still 17 percent above the 10-year average.

Objectives: To inventory waterfowl populations throughout the fall and winter months and in conjunction with special or experimental waterfowl seasons.

Procedures: Two Cessna 172 aircraft were used to inventory waterfowl along coastal Massachusetts including Cape Cod and the Islands. Each aircraft was manned by a commercial pilot, a recorder and two observers. Data were tabulated by species and zones. Weather conditions, flight problems and visibility factors were recorded for each flight. The winter inventory data were submitted on standard forms to the Bureau of Sport Fisheries and Wildlife. Flights were made on 14 November 1974 and 8 and 15 January 1975.

Findings: The 1975 waterfowl inventory flight was marked by preceding mild weather and an extended period between flights. Due to the availability of only a single aircraft, Nantucket and Martha's Vineyard Island were flown on 8 January. The flight had been postponed on 7 January due to a snowstorm. Large concentrations of eider were located between the two islands, an unusual situation. Flying the rest of coastal Massachusetts was postponed because of rain on 9 January and heavy fog on 10 January. No planes were available on the weekend of 11 and 12 January. Rain on 13 January prevented flying and no planes were available on 14 January.

Publication approved by Alfred C. Holland, State Purchasing Agent #5146

Table 1. Winter Inventory, New Hampshire Line to Cape Cod Canal, Mt. Hope Bay and Off-Shore Islands, 1975.

Area	Year	Mallard	Black Duck	Scaup	Goldeneye	Bufflehead	Old Squaw	Scoter	Eider	Merganser	Canada Goose	Brant	Miscellaneous	Total
Salisbury to Wingaersheek Beach	1971	35	1,742	40	204	5	3	1,325	125		180			3,656
	1972	130	4,862	60	55	90		1,400	1,800		360			8,837
	1973	10	5,035	330	1,510				1,350		310			8,545
	1974	130	8,164	1,575	505	5		35	65		1,468			11,947
	1975	100	3,918	2,550	200	40			475	15	2,207			9,505
Cape Ann to Gloucester Harbor	1971		525		135	24		115		2	37			838
	1972	10	1,995		210	5		50	660	6	50			3,016
	1973		545		175	35		25	1,535	11	30			2,356
	1974	80	2,870		35	6			40	29	300			3,360
	1975		568	25	220	17			45	25	275			1,175
Magnolia to Winthrop Standpipe	1971		360		131	37		970	5,120					6,618
	1972		605	3,090	375	90		470	4,995	21	10			9,656
	1973	15	695	2,660	385	46		1,080	7,165	15				12,061
	1974		160	70	469	130			15,080	22				15,926
	1975	10	287	605	210	40		70	8,295	65				9,582
Winthrop Standpipe to Cohasset Beach Tower	1971	5	523	167	173	23		190	2,865	3	26			3,957
	1972		1,083	6,640	122	15		735	850	2				9,447
	1973	60	1,440	4,130	392	45		85	1,945	39				8,136
	1974		400	3,090	66	25		55	710	35				4,381
	1975		475	550	95	20		17	1,210	35				2,402
Cohasset Beach Tower to Rocky Point	1971	40	1,084	99	137	15		203	1,023	3	305			3,109
	1972		4,027	30	70	10		326	17,220		1,541			23,224
	1973	40	2,270	30	75				525	7				2,947
	1974	50	2,677		89	80			8,835		1,400			13,131
	1975		1,072	600	80	5		7	11,178	5	1,729			14,656

Table 1. Winter Inventory (Continued)

Area	Year	Mallard	Black Duck	Scaup	Goldeneye	Bufflehead	Old Squaw	Scoter	Eider	Merganser	Canada Goose	Brant	Miscellaneous	Total
Rocky Point to Cape Cod Canal	1971	2	35		100			92	244					473
	1972				5			330	780					1,115
	1973			25				60	485					570
	1974				20				910					930
	1975		5		5			5	156	3				174
Cape Cod to Nobscusset Point	1971	10	974		10			60	1,825		1,059			3,938
	1972	10	299	16	50	42		834	1,888	9	503	20		3,671
	1973	55	2,223		57	16	10	30	1,218	20	568			4,197
	1974	74	1,821	5	49		12	10	1,460	22	470			3,923
	1975	70	2,241		64	55	5		1,498	43				3,976
Nobscusset Point to Great Island	1971	10	390		50	1		115	830		1,341	65		2,802
	1972	2	1,464		14	126	10	25	342		5,790	2,875		10,648
	1973		232		57	90	25	60	479	25		325		1,959*
	1974	1	710		85	61	8	22	170	11	1,030	32		2,130
	1975		782		41	5		225	605	85	1,568	103		3,414
Great Island to Race Point	1971		292		25			15	105	65				512
	1972	2	1,286		63	12	10	234	709	32	25			2,373
	1973		145		50	38	2	60	272	10				602*
	1974	52	175		76	35		7	550	43		300		1,238
	1975	120	530		42	45			235	81				1,053
Nauset Light to Monomoy Point	1971	25	643		235	335		125	2,140	22	1,733			5,278
	1972	481	5,104	335	2,323	698		190	4,832	22	2,436		30 CB	16,771
	1973	37	3,314		350	365		250	2,200	10	1,851			8,377
	1974	145	1,239		125	503	100	115	14,795	10	2,856			19,888
	1975	160	2,008	100	584	549		10	2,703	192	3,987	420	100 BP	10,813

Table 1. Winter Inventory (Concluded)

Area	Year	Mallard	Black Duck	Scaup	Goldeneye	Bufflehead	Old Squaw	Scoter	Eider	Merganser	Canada Goose	Unidentified	Miscellaneous	Total
Chatham to Buzzards Bay	1971	135	542	1,245	585	195		134	2,408	18	534			5,769
	1972	16	573	538	905	80		4,910	1,660	11	115			8,808
	1973		548	655	1,230	650	18	135	1,565	114	645			5,560
	1974	399	279	4,050	2,335	730	36	1,090	8,032	310	607			17,920
	1975	303	462	1,715	1,858	808	4	40	2,015	289	839			8,333
Mount Hope Bay to Taunton River	1971	24	317	3,283	340	73		990	180		425			5,632
	1972	10	585	4,500	245	8		27	35	20	1,397			6,827
	1973		550	940	95	5			40					1,630
	1974	10	559	4,390	120	300				25				5,404
	1975	75	745	4,050	120	147					15			5,152
Quick Sand Point to Sconticut Neck	1971	10	141	257	505	67		145	65	3	217			1,634
	1972		635	1,915	949	175		1,365	2,800	3	45		2 CB	7,887
	1973		485	740	1,065	135		220	410	55	1,065		180 S	4,359
	1974	20	444	863	325	225			80	17	1,090		135 S	3,199
	1975	67	866	7,085	1,722	433			277	180	1,415		169 S	12,214
Martha's Vineyard and Elizabeth Islands	1971	94	758	370	458	217		1,209	1,135	69	1,117			5,457
	1972	14	1,158	1,510	1,296	300		2,305	1,545	96	1,684		180 C	10,718
	1973	158	1,015	515	1,300	569	123	1,595	1,735	153	943		239 S	8,492
	1974	102	1,644	25	2,987	175	45	1,465	3,192	461	343		89 S	11,138*
	1975	55	1,510	270	1,272	615	67	1,194	540	742	1,680	105	251	8,301
Nantucket	1971	55	625	300	208	47		1,150	6,631	10	474		90 CB	9,590
	1972		902	775	716	63	4	740	4,695	88	383			8,366
	1973	50	733	310	805	210	67	725	6,605	69	319		3 S	9,896
	1974	95	1,143	220	525	451	85	525	8,385	45	775		379	12,628
	1975	210	510	910	927	419	116	7,752	17,573	483	490		118	29,508

* Includes unknowns. CB=Canvasback S=Swan C=Coot BP=Baldpate

The mainland and Cape sections of coastal Massachusetts were finally flown on 15 January.

Weather during the period was unseasonably mild for the most part, with all bays, harbors and major rivers ice free. Many inland ponds were also open as were most salt marshes. Food conditions were good with mussel flats ice free.

The total waterfowl count was 120,278. This was down 5.3 percent from 1974. The black duck count of 15,978 was down 28 percent from 1974 and 26 percent from the 10-year average. The count was the lowest in recent years. The mallard count of 1,170 was up only 1 percent over 1974 but up 93 percent over the 10-year average. Mallards were especially numerous along Buzzards Bay and on Nantucket Island. Most mallards on mainland Massachusetts frequent inland ponds where they are missed during the flights. The merganser count was also up with 2,243 birds counted. This was 118 percent more birds than in 1974 and 337 percent over the 10-year average. The large merganser count is part of a continuing trend of recent years.

Among the sea ducks, the scaup count was up 29 percent (18,460) over 1974, 20.6 percent over the 10-year average with an unusually large concentration of the birds outside of New Bedford, Massachusetts. Buffleheads (3,076) were up 13 percent over 1974, 39.5 percent over the 10-year average; while goldeneyes (7,440) were down 5 percent from 1974, 17 percent from the 10-year average.

Sea ducks (56,317) were up 13 percent over 1974 but down 13.6 percent from the 10-year average. Most of the loss was in scoters with the eider count being 46,805.

Numbers of Canada geese in Massachusetts continue to increase with the count of 14,205 being up 31 percent over 1974 and 43 percent over the 10-year average.

Counts for all waterfowl by zones and compared to the previous four years are presented in Table 1.

Recommendations: Winter inventory counts should be continued to provide trend data on wintering waterfowl populations.

MASSACHUSETTS DIVISION OF FISHERIES AND GAME
Bureau of Wildlife Research and Management

Approved: _____
Colton H. Bridges, Deputy Director

Prepared by _____
H W Heusmann, Waterfowl Biologist

Date _____

JOB PERFORMANCE REPORT

State: Massachusetts

Cooperators: Massachusetts Division of Fisheries and Game

Project No.: W-42-R-9 Project Title: Massachusetts Waterfowl Research Program

Job No.: II-1 Job Title: Coastal and Inland Waterfowl Banding - Winter Segment

Period Covered: 1 January 1975 to 15 March 1975

Summary: State personnel along with three cooperators banded a total of 2,247 waterfowl at 32 locations using bait traps or cannon nets. One thousand one hundred twenty ducks were banded as part of the regular winter black duck trapping program. Black ducks made up 80.8 percent of the total, mallards 7.9 percent and mallard x black duck hybrids 11.1 percent. In conjunction with the Park Waterfowl project, an additional 1,127 waterfowl were banded including 959 mallards, 37 black ducks, 124 mallard x black hybrids, 3 pintail and 4 American coot.

Objectives: To band 1,000 wintering black ducks, the quota established for Massachusetts by the Banding Committee of the Atlantic Waterfowl Council, and to sample inland wintering waterfowl populations.

Techniques Used: Bait trapping stations for coastal black ducks were located in Buzzards Bay, Duxbury, mid-Cape and outer Cape areas. Cannon net locations were established in the Boston Harbor area. Cannon net locations were established at 15 inland sites. A bait trap was used at a fourteenth site.

Baiting of trapping sites began after the close of the 1974-1975 waterfowl season with actual trapping on the sites varying with response of birds to the bait site. Trapping procedures were the same as described in Job Progress Report W-42-R, Job No. II-1. Records of all newly-banded birds as well as returns and foreign recoveries were recorded on individual file cards and past records updated on return birds. Federal banding schedules were submitted.

Findings:

Coastal Trapping

The winter of 1975 was moderate in temperatures continuing a five-year trend. January temperatures averaged six to eight degrees (Fahrenheit) above normal. February temperatures were near normal. Coastal bays and harbors remained ice-free throughout the winter and

Publication approved by Alfred C. Holland, State Purchasing Agent #5146

mussel flats were open. Despite these generally unfavorable trapping conditions, 905 black ducks, 88 mallards and 127 mallard x black hybrids were banded on coastal trapping sites (Table 1). An additional 170 plus blacks were banded by Parker River National Wildlife Refuge personnel, thereby exceeding the Massachusetts quota of 1,000 winter-banded black ducks.

Black ducks made up 80.8 percent of the birds banded in 1975, hybrids comprised 11.1 percent and mallards 7.9 percent.

Inland (Park) Trapping

Despite difficulties with equipment involving hang fires, a malfunctioning detonator and stakes pulling free from unfrozen soil, 959 mallards, 37 black ducks and 124 mallard x black hybrids were banded (Table 2). Also banded were 3 pintails and 4 American coot. An additional 295 previously banded birds were captured. These ducks were primarily returns from previous years but also include foreign recoveries and some repeats.

Mallards made up 85.1 percent of the new banded birds; hybrids comprised 11.0 percent and black ducks 3.3 percent.

A newly-acquired 20 x 20 foot cannon net, propelled by two rockets, allowed banding in new situations. The Carling Brewery flock was sampled for the first time since 1971 since the new small net could be set up on the lawn. The larger standard cannon net could only be used on the ice and the lake has not been frozen over since 1971. The smaller net also made it possible to cannon net Look Park, Northampton and Mill Pond in Winchester.

Recommendations: Winter banding to meet black duck banding quota established by the Atlantic Waterfowl Council Banding Committee should be continued at least one more year. Currently more than 4,650 waterfowl have been banded during winter park trapping operations of which 3,800 were mallards. A minimal goal of 5,000 park waterfowl is desired.

Acknowledgments: The personnel of the Division of Fisheries and Game wish to thank Mr. Taisto Ranta, town warden of Barnstable, and Doug Kolweit who assisted him and Seth Taylor of Chatham.

MASSACHUSETTS DIVISION OF FISHERIES AND GAME
Bureau of Wildlife Research and Management

Approved: _____
Colton H. Bridges, Deputy Director

Prepared by _____
H.W Heusmann, Waterfowl Biologist

Date _____

Table 1. Summary of winter coastal trapping (black duck trapping) during 1975

Area	Black Duck	Mallard x Black Hybrid	Mallard	Total
Boston				
Lynn Harbor	38	18	0	
Wollaston Beach	47	19	0	
Subtotal	85	37	0	122
Plymouth-Duxbury				
Standish Shores	132	38	5	
Myles Standish Home Site	57	0	6	
Eagle Nest Point	159	1	26	
Subtotal	348	39	37	424
Buzzards Bay				
Canal Entrance	16	1	1	
Wareham River	16	2	4	
Peters Neck	12	1	0	
Lewis Point	70	7	10	
Weweantic River	103	10	21	
Subtotal	217	21	36	274
Mid-Cape				
Indian Trail	89	5	6	100
Outer Cape				
Town Cove	86	14	3	
Briar Springs	36	5	0	
Pocket Neck	4	0	0	
Nauset Springs	22	5	1	
Oyster Pond	18	1	5	
Subtotal	166	25	9	200
All Areas Total	905	127	88	1,120

Table 2. Summary of winter 1975 inland (park) trapping

Area	Black Duck	Mallard X Black Hybrid	Mallard	Total	Other Previously Banded Ducks*
Town Hall Pond Wellesley	0	9	62	71	61
D.W. Field Park Brockton	7	25	42	74	24
Forest Park Springfield	1	6	85	92	38
Norumbega Park Newton	2	3	10	15	0
Jenny Pond Plymouth	10	11	170	194[1]	20
Cordage Park Plymouth	0	3	23	26	6
Flax Pond Lynn	4	12	103	119	34
Furnace Pond Pembroke	1	2	88	99[2]	32
Hobart Pond Whitman	0	0	3	3	0
Clay Pit Pond Belmont	0	1	6	7	3
Fulling Mill Pond Hingham	0	22	112	134	9
Carling Brewery Natick	6	11	94	111	13
Horn Pond Woburn	2	8	56	66	18
Mill Pond Winchester	0	3	40	43	9
Look Pond Northampton	4	6	56	66	28
Institute Park Worcester	0	2	9	11	0
	37	124	959	1,127	295

* Includes returns, repeats and foreign recoveries.
1 Includes 3 pintail.
2 Includes 4 American coot.

PERFORMANCE REPORT

State Massachusetts Project Number: W-42-R-9

Project Title Massachusetts Waterfowl Research Program

Project Type: Research

Period Covered: 15 January 1975 to 14 January 1976

Work Plan II Coastal and Inland Waterfowl Banding

Work Plan Objectives: To meet banding quotas set by the U.S. Fish and Wildlife Service and conduct other banding operations as they relate to research projects.

Job II-1 Coastal and Inland Waterfowl Banding (Preseason Segment)

Job Objectives: To meet Federal banding quotas of 900 wood ducks and 500 black ducks and band other species incidental to such banding activities.

Summary: A total of 1,513 waterfowl and other birds were banded during the 1975 preseason banding segment. This total included the following hand-reared birds: 267 black ducks, 66 common eider, 35 wood ducks and one mallard. Wild-banded waterfowl included 306 wood ducks, 192 mallards, 174 black ducks, 34 mallard x black hybrids, 52 blue-winged teal, 38 green-winged teal, 6 hooded mergansers, 3 baldpate, 2 gadwall and 70 Canada geese. Also banded were 15 common gallinules, 1 coot, 11 sora rails, 3 Virginia rails, 3 black-crowned night herons, 1 American bittern, 44 least sandpipers, 13 semi-palmated sandpipers, 6 spotted sandpipers, 3 solitary sandpipers, 1 semi-palmated plover, 1 lesser yellowlegs and 5 screech owls. Park-banded birds included 147 mallards, 8 mallard x black hybrids, 3 mallard x domestic hybrids and 2 black ducks.

Target Date: 1979

Status of Progress: On schedule.

Deviations in Progress: None

Recommendations: Continue banding efforts to meet Federal quotas.

Cost: $11,050 (184-1/2 man days and airboat engine, maintenance, gas and bait corn).

Publication approved by Alfred C. Holland, State Purchasing Agent #5146

Remarks:

Hand-Reared: Two hundred sixty-seven (267) hand-reared black ducks and 1 mallard were released as part of Research Project W-42-R-9:VII-1, Black Duck Imprinting Study. Releases were made in March, April and July.

Thirty-two (32) hand-reared wood ducks were also released in conjunction with Research Project W-42-R-9:IV-4, Establishment of Wood Duck Populations by Release of Hand-Reared Birds and by Clutch Supplementation. Three additional wood ducks were hand-reared by Southeast District Game Manager Dick Turner and released in Lakeville.

Cooperator Philip Stanton of Upton, Massachusetts reared and released 66 common eider. All were released on Penikese Island in Buzzards Bay, Massachusetts in July.

Nest Trapping: While conducting wood duck production study project W-42-R-9:IV-1, 2 and 4, 79 wood ducks, 6 hooded mergansers, 5 screech owls and 1 mallard were captured in artificial nesting structures and banded.

Goose Trapping: A total of 70 Canada geese were captured and banded during June and July by the drive-trapping method. This operation was performed under Gosling Transplant Program, W-42-R-9:V-1.

Shore Bird Mist Netting: Division cooperator, Lee McLaughlin ran a shorebird banding program for the second year. Unfortunately, the Westboro Suasco flood impoundment site where he banded 190 birds in 1974 was not drawn down in 1975. Lack of mud flats due to high waters minimized shore bird habitat and McLaughlin banded only 49 shore birds on the site. One banding trip was made to the Great Meadows National Wildlife Refuge where 19 birds were netted and banded. McLaughlin's season total was 44 least, 13 semi-palmated, 6 spotted and 3 solitary sandpipers; 1 semi-palmated plover and 1 sora rail.

Park Waterfowl Project: A total of 160 ducks were banded in park situations (147 mallards, 8 mallard x black hybrids, 3 mallard x domestic and 2 black ducks). A night drive made at Norumbega Park, Newton, 17 July, yielded 77 mallards, 3 mallard x black hybrids and 2 mallard-domestic crosses and 97 returns. A second drive made at Forest Park, Springfield, on 22 July, resulted in the banding of 60 mallards and 1 mallard x domestic hybrid plus the recapture of 32 previously-banded birds. Cannon netting this summer was poor. Two trips were made each to D. W. Field Park, Brockton; Mill Pond, Danvers; and Turners Pond, Milton. Ducks would not respond to the bait stimulus, however, and only 1 bird was caught in a shot at Turners Pond. Three trips were made to Horn Pond in Woburn. Two shots were made. The first netted 3 mallards and the second 6 mallards, 5 mallard x black hybrids, 2 black ducks and 6 returns. Personnel at Look Park, Northampton would not allow cannon netting this year for fear of scaring off the ducks, although 140 birds were captured by that method last summer.

Preseason Banding: Bait trapping was conducted at the Great Meadows National Wildlife Refuge during late July, August and the first half of September before an outbreak of botulism on the refuge made it necessary to drive birds off the area and discontinue baiting. During the trapping period 79 wood ducks, 46 mallards, 40 black ducks, 5 mallard x black hybrids and 2 common gallinules were banded.

Bait trapping at the Bristol-Blake State Reservation was successful on only one night when 7 wood ducks and 3 black ducks were captured.

Cooperator Jim McDougall of the Ipswich River Audubon Sanctuary bait trapped that area and banded 22 black ducks, 10 mallard x black hybrids, 7 mallards and 7 wood ducks. McDougall also bait trapped in late February and early March and captured 5 black ducks, 2 wood ducks, 2 mallards and 1 mallard x black hybrid. A total of 95 wood ducks, 67 black ducks, 55 mallards, 16 mallard x black hybrids and 2 common gallinules were banded by bait trapping techniques.

Airboat night-lighting was resumed in 1975 after a two-year hiatus. Purchase of a replacement engine made operations again possible. Unfortunately, a combination of factors served to hinder airboat banding success. Low water levels during the midsummer period greatly limited the number of ducks present on the Concord River, Bedford; Broad Meadows, Wayland; and Chicopee River, Chicopee. Rivers are normally concentration sites for broods which are easier captured and banded during the early part of the season. Low water levels, however, meant exposed mud banks and no cover to hold the birds. A botulism outbreak at the Great Meadows National Wildlife Refuge in mid-September eliminated that area during the late season when the greatest concentration of birds are normally gathering there. Holes in the boat hull removed it from action twice, each time for approximately seven days. The first hole led to a partial sinking of the airboat and resulted in water damage to the generator which repeated repairs failed to correct. A smaller generator was borrowed from the Fisheries Section but the lower power output meant dimmer lights which did not hold birds as well.

Despite the difficulties encountered, 601 birds were captured in 21 trips, 523 of which were banded, 10 kept for exhibition purposes and 68 were already banded. The results of the airboating efforts are presented in Table 1.

Table 1. Airboat launchings and species captured, summer 1975.

Location	Date	Mallard	Black Duck	Mallard X Black	Wood Duck	B. W. Teal	G. W. Teal	Baldpate	Gadwall	Mallard x Domestic	American Coot	Common Gallinule	Sora Rail	Virginia Rail	American Bittern	Miscellaneous	Previously Banded	Total
Broad Meadows, Sudbury	7/30/75														2		1	3
Concord River, Bedford	7/31/75																	0
Turkey Hill Brook, Paxton	8/6/75	10	1	4														15
Ipswich River, Topsfield	8/7/75	1			20	4												25
Stop River, Medfield	8/11/75				Generator damaged.													0
Chicopee River, Chicopee	8/26/75	4																4
Great Meadows, Concord	8/27/75	13	5		8	5	8		1			1					2	43
Broad Meadows Sudbury	8/28/75				Generator would not start.													0
Turkey Hill Brook, Paxton	9/2/75	14	6	3	3	1	2										1	30
Ipswich River Topsfield	9/3/75	3	1		24	4	2										1	35
Bristol Blake, Norfolk	9/4/75	2			4										1			7
Great Meadows, Concord	9/5/75	6	4		14	5	8		1			3				2	22	65
Broad Meadows, Sudbury	9/9/755																	0
Fisherville Grafton	9/11/75	4	2	2		2		(Generator burned out)										10
Great Meadows, Concord	9/12/75	14	7	2	10	4	8	3				4	1				18	71

Table 1 (Continued). Airboat launchings and species captured, summer 1975.

Location	Date	Mallard	Black Duck	Mallard X Black	Wood Duck	B. W. Teal	G. W. Teal	Baldpate	Gadwall	Mallard X Domestic	American Coot	Common Gallinule	Sora Rail	Virginia Rail	American B Bittern	Miscellaneous	Previously Banded	Total
Turkey Hill Brook, Paxton	9/15/75	1														1	1	3
Rice City Pond, Uxbridge	9/24/75	28	35	1	15	18	4						2	1				104*
Ipswich River, Topsfield	9/25/75	4	10	1	18	3	1				1	(Generator burned out)					6	44
Fisherville Pond, Grafton	9/26/75				Starter burned out.													0
Ipswich River, Topsfield	9/30/75	7	6	1	5	4	2										14	39
Fisherville Pond, Grafton	10/1/75	25	32	4	11	2	3					5	7	2			2	93
Totals		136	109	18	132	52	38	3	2	0	1	13	10	3	1	5	63	591

* Plus 10 teal held for waterfowl collection.

Acknowledgments: The Division of Fisheries and Wildlife wishes to express appreciation for the assistance and cooperation of Mr. and Mrs. Charles Thomas of Stony Brook Audubon Sanctuary and members Dirk Hefflefinger and James Davies; Dick Mailey and Jim McDougall of the Ipswich River Audubon Sanctuary; Linda Gintoli and the staff of Great Meadows National Wildlife Refuge and members of the Western Massachusetts Duck Hunters Association.

MASSACHUSETTS DIVISION OF FISHERIES AND WILDLIFE
Bureau of Wildlife Research and Management

Approved: _____
Arthur W. Neill, Superintendent

Prepared by _____
H W Heusmann, Waterfowl Biologist

Date _____

PERFORMANCE REPORT

State: Massachusetts Project Number: W-42-R-9

Project Type: Research

Project Title: Massachusetts Waterfowl Research Program

Period Covered: 15 January 1975 to 15 January 1976

Work Plan No. III - Waterfowl Harvest Studies

Work Plan Objectives: To analyze harvest data from the 1973 Massachusetts zoned waterfowl season and compile a three-year analysis (1971-1973) of the experimental zoned harvest regulations and to analyze banding data, wing survey data, and hunter questionnaire data relative to the continental black duck population with major emphasis on survival rates, differential vulnerability to harvest, and the development of a simulation model of the black duck population.

Job III-1 Characteristics of the Massachusetts Waterfowl Harvest

Job Objective: To analyze harvest data from the 1973 zoned waterfowl season and complete a three-year (1971-1973) analysis of the Massachusetts zoned waterfowl harvest regulations.

Summary: Analysis of the 1971-1973 zoned waterfowl season was completed and presented at the Atlantic Waterfowl Council annual meeting held in Dover, Delaware, 31 July 1974. Supplemental to this report, a Massachusetts Waterfowl Hunting Questionnaire was prepared and distributed the fall of 1974. A usable sample of 624 responses was obtained from a mailing of 1,100. Thirty-three percent of the responses came from coastal residents, 67 percent were inland residents. October was the number one month preferred for hunting (received 50 percent of first choice votes) but a large portion of the respondents also picked it as the least favorable month (26%). November received 31 percent of the first-place votes while January received only 5.5 percent. November also received 50 percent of the second-place votes and only 5 percent of the last-place votes, indicating that November is the best compromise month for hunting in Massachusetts. When asked their choice of season regulations, more hunters (209) chose a straight season than did a split (195) or zoned (161) season. However, nearly as many hunters indicated a straight season was their last choice (198) as did hunters selecting it as first choice. The zoned waterfowl season was disliked by a large number of hunters (204) leaving a split season the best compromise.

Publication approved by Alfred C. Holland, State Purchasing Agent #5146

The survey also indicated about half the inland residents hunted at least once on the coast while an equal proportion of coastal residents hunted inland. Eighty-seven percent of the respondents indicated they continued to hunt the same areas during the zoned seasons as they did prior to zoning. Nearly one-third of the western Massachusetts residents who previously hunted both coastally and inland restricted their hunting to inland during the zoned seasons.

Target Date: December 1975.

Status of Progress: On schedule.

Deviations in Progress: None.

Recommendations: This job should be extended one more year in order to allow the preparation of a manuscript combining the results of the wing survey data presented at the Atlantic Flyway Council meeting with questionnaire results. The manuscript should then be presented to The Wildlife Society Bulletin for possible publication.

Cost: $540 (11 man days)

Remarks: A complete report of "The 1974 Massachusetts Waterfowl Hunting Questionnaire Results" is available from the Massachusetts Division of Fisheries and Wildlife, Field Headquarters, Westboro, Massachusetts 01581.

MASSACHUSETTS DIVISION OF FISHERIES AND WILDLIFE
Bureau of Wildlife Research and Management

Approved _____
Arthur W. Neill, Superintendent

Prepared by _____
H W Heusmann
Waterfowl Biologist

Date _____

PERFORMANCE REPORT

State Massachusetts Project Number: W-42-R-9

Project Type: Research

Project Title: Massachusetts Waterfowl Research Program

Period Covered: 15 January 1975 to 14 January 1976

Work Plan IV Wood Duck Population Study

Work Plan Objectives: To determine the contribution of dump nesting to total wood duck production; evaluate the use of starlingproof nesting structures by wood ducks; investigate the feasibility of utilizing plastic nesting structures to increase nest sites; to use release of game-farm wood ducks to establish nesting populations on the Quabbin Reservoir as well as to reintroduce wood ducks to former nesting areas and to evaluate the use of eggs from game-farm wood ducks to increase clutch size in wild wood duck nests.

Job IV-1 The Biology of Dump Nesting in Wood Ducks

Job Objectives: To determine the contribution of dump nesting to total wood duck production.

Summary: Use of modified predator guard collaring devices resulted in the tagging of 28 out of 42 possible incubating hens. Two out of 50 nests were abandoned, possibly due to the marking devices. Early-morning field observations indicated that behavior of collared wood ducks was no different from that of uncollared birds. Tags were clearly visible on the birds at distances up to 200 meters with a 20x spotting scope.

Completion Target Date: December 1977.

Status of Progress: One year behind.

Deviations in Progress: A minimal marking success of 85 percent has not yet been achieved. This problem is probably due to a difference in wariness of hens and variations in the construction of the actual marking devices which are handmade and lack precision measurements. However, multiple marking attempts for each nesting hen should make achievement of job objectives possible.

Recommendations: Use of dawn observation checks on areas where dump nesting occurs, in conjunction with multiple tagging attempts for each laying hen, should be conducted in 1976 and 1977. Follow-up banding of all incubating hens should be made in order to determine the nesting status of dump nesting hens.

Publication approved by Alfred C. Holland, State Purchasing Agent, #5146

Cost: $4,350 (102 man days plus mileage)

Remarks: Procedures: Initially, wood duck collar marking predator guards of the style described in Job Performance Report W-42-R-8:IV-1 were used in 1975. Quality control, however, was not maintained by the project leader resulting in stretched rubber band dimensions of approximately 82 x 82mm instead of the recommended 76 x 76mm. Size 31 rubber bands (63 x 3mm) were used instead of the size 32 (75 x 3 mm) used in 1974 and each vinyl tag was fitted with a numbered monel fish fin tag.

Problems. The first indication of problems occurred when project assistants found a dead female wood duck in Box 19 at Breeding Pond, Webster. The bird had a rubber band tag encircling her back and upper legs. The hen had been collared in Box 17 where she was apparently laying, and entered Box 19 the following day. Once in the box, the bird was unable to escape since she could not jump or climb to the entrance hole. The same day as the dead hen was found, the project leader observed a female at Fisk Mill Pond, Hopedale, leave a box collared around the back behind the wings. The following day, all boxes at Fisk Mill were checked and this female was found trapped in a different nest box. The rubber band had slipped down to encircle her in the same manner as on the dead hen. The rubber band was removed and repositioned around the base of the bird's neck. The bird was unharmed. All marking devices were removed from boxes. Of the remaining 29 devices that had been placed on boxes, the results were as follows:

Tag still mounted on hooks	12
Hens collared around neck	8
Hens collared around rump	2
Tag laying in box or underwater	4
Tag gone, hen not tagged (dump nest)	2
Nest abandoned	1
Total	29

In the cases where the collars were still mounted, the laying female was able to push through the rubber band without pulling it off the hooks. The two missing collars were on known dump nests where the incubating hen was unmarked but the dump female could have been collared. The one abandoned nest had only one egg laid when the collar was put on and may have been a random nest. One other nest of only two eggs was abandoned but the collared hen was found nesting in a different box.

Modifications. The marking predator guards were modified by replacing the L-shaped 25 x 9mm threaded hooks with similar hooks of 32 x 12mm dimensions. The hooks were then bent to form a slightly obtuse angle (approximately 93°). The hooks were set back 15mm from the inside edges of the predator guard and screwed in until a rubber band stretched over the hooks measured 71 x 71mm.

Success of Modified Marking Devices. The modified marking devices were placed on 50 preincubated nests. The results were as follows:

Hens collared	28
Collars found loose in box	6
Random nest	3
Nest abandoned, possibly due to collar	2
Nest abandoned, not due to collar	2
Collar missing, hen incubating normal size nest	6
Collar missing, hen incubating dump nest	2
Hen escaped handling	1
Total	50

If the three random nests, the four abandoned nests and the single hen that escaped handling are subtracted from the sample size, the 28 collared hens represent a 66.6 percent success rate. Two of the missing collars were from boxes with known dump nests. It is possible that the dumping hens were collared but not found nesting.

Missing Collars. Only nine of the 22 collars not found on hens were accounted for. The question of what happened to the other 13 collars remains unsolved. There are, however, several possibilities. The possible collaring of dumping hens has already been mentioned. In fact, two of the hens found collared in this study had picked up their collars in different boxes than those in which they were found incubating. It is also possible that a hen merely inspecting a box might be collared, but never found nesting afterwards. A third possibility is removal of the collar by some other animal. In a separate study described below starlings were observed removing a collar from one box. Tree swallows could be responsible for knocking a collar off one or more of its hooks although it is doubtful the birds would carry such a cumbersome item off. Raccoon scratches are frequently found on nest boxes and it is possible these animals may be involved in collar disappearance.

Nest Abandonment. Problems of nest abandonment due to collar tags appear to be minimal. In two instances of abandonment, eggs were added after the tag disappeared; while in a third, the hen was observed incubating. In the two instances where the tag may have caused abandonment, no more eggs were added after the tags were put in place and the tags were found in position when checked several days later.

Dump Nesting Activities. In order to discover problems that might be encountered in field observations of nesting hens, a pilot study was conducted at the Fisk Mill area in Hopedale. This area was chosen since (1) boxes could be turned so all entrances were visible from one vantage point, (2) it had 100 percent box usage in 1974, (3) several dump nests were usually established each year on the area, and (4) it was only 19 km (12 miles) from the Division's research headquarters.

Nest box checks began 1 April and boxes were checked every three to four days thereafter. When a new nest was initiated, the regular predator guard was replaced with a collaring guard. When a dump nest was discovered (based on egg deposition rates of more than one a day), the box was marked for dawn observations. Multiple collaring attempts were used on several boxes with tags being replaced in the marking guards until a hen was confirmed tagged. In order to mark all dumping hens using a box, the suspected dump nest was visited before dawn and a collar put in place. At this time, the number of eggs in the clutch was counted. The observer then retired to a vantage point and observed the box by means of 7 x 50 binoculars and a 20-power spotting scope. When a hen entered the box, she would be tagged. After the hen was observed to leave the box, the box was checked and the eggs again counted. The addition of an egg confirmed that the hen had laid, a new collar was placed on the box, and the observer retired to shore to await the second hen. The checking process was repeated until all hens were accounted for.

A total of 12 wood duck nests were started at Fisk Mill. Three were random clutches of one, one, and three eggs. The other nine nests were incubated to term. Four of the nine nests were dump nests caused by two different females. Hen 595-26528, an eight-year-old, was collared in Box 3, captured in Box 8 and observed entering and laying in Box 4 before finally establishing her own nest in Box 7. The hen was known to have laid at least one egg in each box. It is believed she deposited a total of seven eggs in Box 3, three eggs in Box 8, and at least one egg in Box 4 before establishing a nest of nine eggs in Box 7 which she incubated. (All laying took place between 8 April and 11 May.) Apparently, Box 7 was the only box she used where no eggs were already present although she may have been responsible for the one egg random nest found in Box 6 on 7 April. This hen, 595-26528, was hatched in Box 4 in 1967, nested in Box 6 in 1968, Box 3 in 1970 and Box 6 in 1972 and 1974. There is no record of her nesting in 1969, 1971 and 1973.

The second dumping hen was 735-57676. The hen was at least three years old and had nested in Box 5 in 1973 and Box 2 in 1974. This hen was collared in Box 11 where it is believed she laid at least five eggs during an eight-day period. She was also confirmed laying in Box 4, since on 1 May this bird, hen 595-26528, and a third hen who finally incubated the clutch, all laid in the box. Egg deposition in this box was erratic. There was one egg in the box on 20 April, four on 23 April, six on 25 April, six on 26 April, eight on 27 April, when two hens were observed laying, 13 eggs on 30 April, 16 on 1 May when three hens were observed laying, 19 eggs by 6 May, 19 on 8 May. A hen was in the box for five hours on 9 May but no more eggs were added. The incubating hen was firmly settled into the box by 11 May.

Dawn to noon observations of nesting wood ducks revealed that collared hens acted much the same as uncollared females. Both types of birds preened while sitting on top of a box before entering although one bird was observed to snap its rubber band repeatedly while preening. Normally, the rubber band on checked birds was buried under the feathers with no outwardly visible presence except for the vinyl tag. There was also no indication that the actual collaring of the bird affected its behavior. All collared birds observed entered the box upon being collared and deposited an egg. Birds visiting boxes in which collars were in place, did hesitate to enter the box to a greater degree than a box lacking a collar, but all finally did enter the box.

Collar Tag Retention. One bird was observed collared during an incubation check, but had lost the collar by the time the bird was handled for banding (3-1/2 weeks after first collared). A second bird was observed to lose her collar immediately after being banded. In the bird's struggle to escape from the nest box after being handled, the band slipped from around the bird's neck to her feet and the device was observed hanging from the bird's legs when she flushed.

Tag retention was good for all the vinyl tags, but the chrome colored tags backed with cloth proved unsatisfactory. The chrome coloration began chipping off shortly after collaring and in one instance the monel fish tag was missing from the rotting cloth by the time the bird was handled. In a second case, the distal half of the tag was missing. All vinyl tags were still in perfect condition when birds were handled three to four weeks after collaring although on one hen that renested, examination of the tag nine weeks after collaring revealed the white vinyl had become translucent and the metal fish tag had torn out.

* * * * * * * *

Job IV-2 Evaluation of Starlingproof Nesting Boxes

Job Objectives: To evaluate wood duck and starling usage of horizontal nesting cylinders and wooden boxes equipped with skylight lids.

Summary: Wood duck usage of starlingproof nesting cylinders declined for the first time in six years with 22 nest starts on five areas. Thirteen of the starts were at Meadow Lea, Easton. Starling usage of skylight equipped boxes ran from four out of six control lid boxes to three out of six for boxes with 51 x 76mm light lids, two out of five for boxes with 51 x 114mm openings in their lids and no usage in six boxes with 51 x 152mm light lids. Wood duck usage of light-lid boxes was variable with hens showing a definite preference for normal boxes. Young birds nesting for the first time appeared to be more tolerant of light lid equipped boxes.

Completion Target Date: December 1979.

Status in Progress: On schedule.

Deviations in Progress: The testing of light lids at the Norfolk Correctional Institution pond represents a schedule advancement of one year in evaluating wood duck acceptance of light lids. The findings on starling usage of light lid equipped boxes indicate the need for further testing and may mean falling behind schedule one year if further problems are encountered.

Recommendations: Wood duck usage of starlingproof nesting cylinders should continue to be monitored for at least one more year to complete data on recruitment of cylinder hatched (web-tagged) birds, since wood ducks frequently do not nest until their third summer (Heusmann 1975) and hence 1974 tagged birds may show up in 1976. The evaluation of lids with 51 x 76mm light lids should be discontinued as starling acceptance of boxes equipped with such lids is high. The use of 51 x 152mm light lids should also be discontinued as such lids appear to make boxes too bright for wood duck usage. Instead of the 51 x 152mm skylights, lids with 51 x 133mm skylights should be tested. Also, light lids of 25 x 125mm apertures should be field tested to determine what effect a long, narrow opening has on starling and wood duck usage of nest boxes.

Cost: $3,070 (95-1/2 man days plus mileage and materials)

Remarks: Starlingproof Nesting Cylinders. Monitoring of wood duck usage of starlingproof nesting cylinders continued for the sixth year. Wood ducks used 22 out of 75 cylinders. Cylinders were used on five out of 21 possible areas, 16 of which had concurrent wood duck usage of wooden boxes. This compares to 27 uses out of 85 cylinders in 1974 and usage on eight out of 23 possible areas, 15 of which had wood duck usage of wooden boxes. There were 15 successful hatches in 1975 versus 16 in 1974. Usage of cylinders continues to be good in the southeastern Massachusetts areas with Meadow Lea in Easton being the best area. Eleven out of 16 cylinders were used, with two used twice for a total of 13 nest starts. Ten nests were successful (Table 1). Meadow Lea also has 16 wooden boxes all of which were used by wood ducks or hooded mergansers. There were 24 nest attempts of which 15 were successul.

The decline in cylinder usage can be attributed to a decline in nest success. Five of six nests were successful in 1970, nine out of 10 in 1971, and 12 out of 13 in 1972; then success declined to 13 out of 17 in 1973 and 16 out of 27 in 1974. The 15 out of 22 nests that were successful in 1975 represent an improvement in success rate. Low success rate has been primarily due to abandonment caused by disturbance, and more recently,

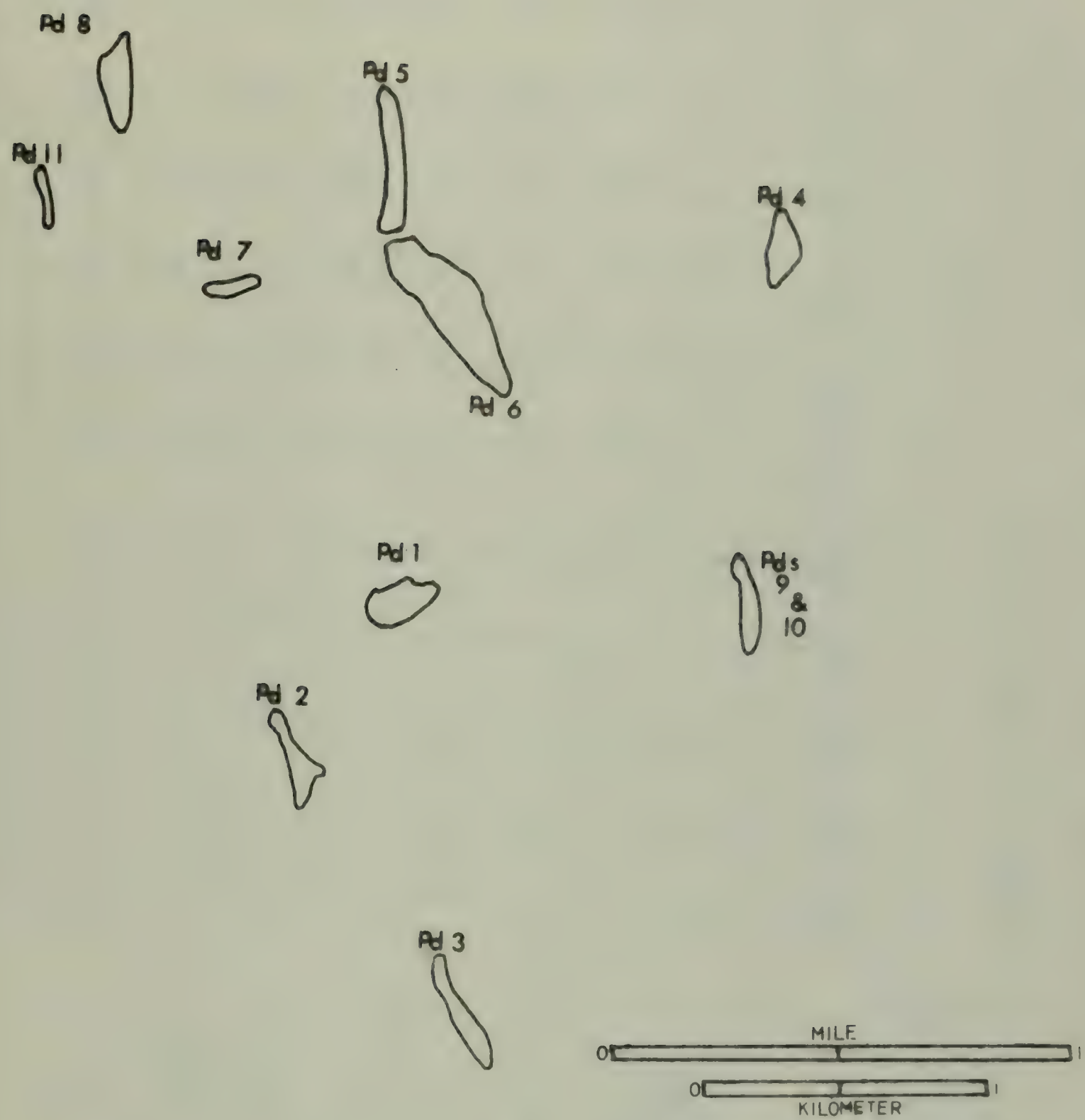

Figure 1. Spatial relationships of Quabbin study area beaver ponds.

Table 1. Starlingproof Wood Duck Cylinder Usage in Massachusetts, 1971 to 1975

	Number of Cylinders					Number of Nest Starts					Number of Successful Nests				
	1971	1972	1973	1974	1975	1971	1972	1973	1974	1975	1971	1972	1973	1974	1975
Onota Lake, Pittsfield	5	5	5	5	0	0*	0*	0*	0*	-	0	0	0	0	-
Cheshire Reservoir, Cheshire	10	10	10	10	0	0*	0*	0*	0*	-	0	0	0	0	-
Atwood Bog Reservoir, Carver	3	3	3	3	3	0	1	0	1	0	0	1	0	1	0
Mazzella's Reservoir, Carver	3	3	3	3	3	0[1]	0	0	1	2	0[1]	0	0	1	1
Great Cedar Swamp, Hanson	3	3	3	3	1	1	0	0	0	0[4]	1	0	0	0	0[4]
Kaplowsky's Reservoir, Duxbury	4	4	6	8	7	1	3	4	5	4	1	3	4	4	2
Meadow Lea Bog, Easton	6	9	10	14	16	4[2]	5[2]	8	13	13	3[2]	4[2]	6	6	10
Cutting's Pond, Stow	1	1	1	1	0	0*	0	0*	0*	0	0	0	0	0	0
Squannacook River, Groton	3	3	3	3	3	0*	0*	0*	0*	0*	0	0	0	0	0
Bristol Blake Sanctuary, Norfolk	2	2	2	1	1	0	0	0[3]	0	0	0	0	0[3]	0	0
Grist Mill Pond, Concord	1	1	1	1	1	0	0*	0*	0*	0*	0	0	0	0	0
Mill Pond, Littleton	1	1	3	3	2	0	1	0*	1	2	0	1	0	1	1
Beaver Brook, Littleton	5	4	4	5	7	0	2	4	2	0	0	2	2	1	0
Zanders Pond, Stow	1	1	1	1	1	0	0*	0	0	0*	0	0	0	0	0
Fisk Mill Pond, Milford	3	5	5	5	5	3	1	1	0	0	3	1	1	0	0
Long Pond, Rutland	3	2	1	0	2	0	0	0	-	0	0	0	0	-	0
Chaffins Pond, Holden	3	3	2	1	2	0*	0*	0*	0*	0*	0	0	0	0	0
Westboro Area, Westboro	3	3	3	3	3	0*	0*	0*	0*	1	0	0	0	0	1
Cunningham Pond, Hubbardston	3	3	1	2	2	0*	0*	0	1	0	0	0	0	0	0
Nipmuc School Pond, Mendon	-	-	3	3	3	-	-	0*	0	0	-	-	0	0	0
Greenough's Estate, Carlisle	-	-	-	3	4	-	-	-	3	0	-	-	-	2	0
Delaney Site, Stow	-	-	-	2	4	-	-	-	0	0	-	-	-	0	0
Fletchers Pond, Stow	-	-	-	2	2	-	-	-	0*	0*	-	-	-	0	0
Breeding Pond, Webster				3	3				0	0				0	0
	63	68	67	85	75	9	13	17	27	22	8	12	13	16	15

* - No wood ducks nest on the area
1 - Plus one sparrow hawk nest
2 - Plus one hooded merganser nest
3 - Plus one black duck nest
4 - One successful wood duck nest in black duck nesting cylinder

nest destruction by raccoons. Recruitment of young birds was also minimal with only one yearling hen nesting out of 123 tagged in 1974. Poor acceptance of cylinders is the primary reason why emphasis has shifted to evaluating skylight lids as a starling nest deterrent device.

Starling Use of Light Lid Boxes. Following up results from the 1974 pilot study, three sizes of "skylights" in standard nest box lids were tested in 1975--51 x 76mm (2" x 3"), 51 x 114mm (2" x 4-1/2") and 51 x 152 mm (2" x 6"). All were centered on the lid. Since it was not known how well wood ducks would accept the light lids, the study areas were chosen so as not to jeopardize wood duck production. Several small areas were selected based on their history of high starling usage but infrequent wood duck usage. These areas were Easterbrook and Hayden Ponds, Dudley; Sutton System, Sutton; Ice House Pond, Acton; East Bolton site, Bolton; and Delaney site, Stow. A total of 6 control lids, 6 small skylight (51 x 76mm), 5 medium skylight (51 x 114mm) and 6 large skylight (51 x 152mm) lids were used. All lids were placed on boxes during early March, approximately one month before starlings normally initiated nesting. Boxes were checked for evidence of starling usage in early June.

Four out of six of the control lid boxes had active starling nests; three out of six small opening lids had nests with eggs or young while a fourth box had some nesting materials present; two out of five medium opening lids had active nests; and there was no usage in any of six large opening lid boxes.

In addition to checking the effects of light lids on starling nest initiation, we also threw out active starling nests found in normal boxes on some areas and replaced the regular solid lids with 51 x 76mm light lids in six cases and a 51 x 152mm light lid in one case. In all six cases where the small opening lids were used, the starlings re-established nests but in the case where the large opening lid was used, the starlings abandoned the box.

The results of our activities indicate that nesting starlings are bothered by either increasing amounts of light from centrally located skylights or a feeling of exposure due to the amount of apparent open space overhead. The 51 x 76mm light lids are not considered effective in preventing starling nesting in wood duck boxes. Testing of the larger opening lids needs to be continued.

Wood Duck Use of Light Lid Boxes. The Norfolk Correctional Institution pond was chosen for a pilot study on wood duck acceptance of nest boxes equipped with light lids since it was an area of both high wood duck and high starling usage. In 1974 there were 13 wood duck nest starts in ten boxes. Every box on the area had one or more wood duck eggs deposited in it. A total of nine

nests were successfully incubated to term involving eight different hens. (One female, 685-61427, successfully hatched a first clutch in Box 9 in May and a second in Box 10 during July.) Waterfowl crew personnel also removed nine starling nests from six different boxes. Had the nests not been removed wood duck production would have been limited although in several instances wood ducks successfully used boxes where starlings were attempting to reconstruct their nests.

During January 1975, four new boxes were erected, bringing the total to 14, although one original box (No. 3) was tilted to a 40-degree angle by ice action.

The first box used in 1975 was No. 10 by Female 685-61427. The box was equipped with a 51 x 114mm (2" x 4-1/2") light lid. The next three boxes used had solid (control) lids. Box 5 was used by Female 735-57632 who had used the box in 1974. Boxes 1 and 11 were used by Females 775-36151 and 775-36104 respectively. Female 775-36104 had nested in Box 1 in 1974 but had apparently switched to Box 11 because of starling usage in Box 1. The starling nest in Box 1 was removed by biologists on 14 April and Female 775-36151 occupied the box when it was checked on 24 April. This hen had nested in Box 7 in 1974. Box 7 was equipped with a 51 x 76mm (2" x 3") light lid in 1975. The use of Box 3 by a starling removed all control lid boxes from availability. Box 4 (51 x 114mm), Box 9 (51 x 152mm) and Box 12 (51 x 76mm) were used by wood ducks next. The nest in Box 9 was a random nest of three eggs. The other two hens were unbanded and not known to have nested on the area in 1974. On 2 May 1975, the 51 x 152mm lid on Box 6 was replaced with a solid lid and the 51 x 152mm lid on Box 14 with a 51 x 114mm lid. No further nests were established by 14 May but an unbanded bird was occupying Box 6 on 29 May. In addition to these hens, Female 775-36130 who used Box 8 in 1974 was found nesting in a box on the nearby Bristol Blake State Reservation in 1975. Box 8 had been equipped with a 51 x 114mm light lid and all the control boxes were presumably used, perhaps forcing the hen to travel to Bristol Blake in order to find a dark box.

The data from the Norfolk study area indicates differing tolerance to light by nesting wood ducks, but shows a preference on the part of the birds for dark boxes. Massachusetts data indicate wood ducks frequently return to the same box to nest each year. When light lids were put on boxes, two of three returning hens nested in different boxes than they had used previously. Birds nesting for the first time may be more versatile in their selection of boxes.

Tree swallows were also versatile and readily nested in boxes equipped with all three types of skylight lids.

Job IV-3 — Cost Analysis and Prototypes Development of Plastic Wood Duck Nesting Structures

Job Objectives: To investigate the feasibility of utilizing plastic nesting structures to increase wood duck nest sites.

Summary: This job was inactive.

Completion Target Date: December 1978.

Status of Progress: Two years behind.

Significant Deviation: No work due to need for analyzing results of Job IV-2.

Recommendations: Postpone design work until data from Job IV-2 can be analyzed.

* * * * * * * * * * *

Job IV-4 — Establishment of Wood Duck Populations by Release of Hand-Reared Birds and by Clutch Supplementation

Job Objectives: To establish populations of wood ducks in the Quabbin Reservoir, to restore populations in other areas and to determine the feasibility of increasing wood duck production by creation of artificial dump nests.

Summary: The release of 12 pair of adult wood ducks on two beaver ponds of the Quabbin Reservoir in April of 1975 resulted in two confirmed nests by released hens and a third successful nest believed to be the product of a released hen. The release of five adult hens at Turkey Hill Brook, Paxton resulted in one hen establishing a successful nest.

Completion Target Date: December 31, 1979.

Status of Progress: Behind schedule.

Deviations in Progress: Raccoon depredations in the game farm pens resulted in nest destruction and brood loss, making release of immature wood ducks during the summer of 1975 impractical.

Recommendations: Release of adult breeders in the spring of 1976 will probably be impractical. However, release of immature birds during the summer of 1976 should be considered.

Cost: $1,150 (17-1/4 man days plus mileage and feed)

Remarks: Released Birds. Six pairs of adult wood ducks were released on each of two beaver ponds on Quabbin Reservoir lands on April 4, 1975. A number of black ducks were released at the same time in conjunction with Project W-42-R, Job VII-1. Game farm hopper feeders were in place on each release site as were a number of wood duck nesting boxes and black duck nesting cylinders. All

released birds left the shipping crates and remained on the release pond for at least the ten minutes they were observed. A number of surrounding beaver ponds were also equipped with nesting structures, but only the release sites had feed hoppers (see Figure 1).

No successful nests were completed on Pond 1, the first release site, although two random nests of one and three eggs were started in mid-June. On the second release site, Pond 2, a female hooded merganser flushed from a box containing six merganser and eight wood duck eggs during an early May check. The final clutch of five merganser and ten wood duck eggs was never incubated although a hand-reared wood duck did hatch off a clutch of six eggs in mid-July. The hen had established her nest in a black duck nesting cylinder.

A random nest of three wood duck eggs was discovered in a nest box on Pond 3 in late May. A wood duck nested successfully in a box on Pond 4, hatching a clutch of nine eggs but the bird was never handled. Finally, a hand-reared hen was found incubating a clutch of seven eggs in a box on Ponds 9-10 but the bird abandoned after being handled. Since only one wood duck nest was found in boxes on the Quabbin beaver ponds during the previous four years, I believe all the nests found during this study were the results of released hens.

A second release of five female and three male adult wood ducks was made at Turkey Hill Brook, Paxton, on April 8, 1975. The area had six wooden nest boxes and four wood duck nesting cylinders present but no feed hoppers. Several of the birds flushed immediately after release. One hen established a nest by April 25 and successfully hatched a clutch of 12 eggs.

There were a total eight nest starts as the result of released hens, four of which were incubated, three successfully. The nests were the result of releasing 17 female wood ducks. Since these birds were yearlings and some yearling hens may not establish nests their first year (Heusmann 1975), the four hens that were found nesting represent a moderately successful release.

Game Farm Production. Game farm production of wood ducks was nearly eliminated due to raccoon predation. No attempt was made to artificially hatch or rear ducklings in 1975 since only eight birds were raised to flight stage by this method in 1974. Instead birds were allowed to establish their own nests in standard nest boxes. Moving small incomplete clutches and adding them to larger incomplete clutches in order to create artificial dump nests was conducted in several instances. The results of these attempts to increase production could not be evaluated because of the activities of raccoons.

Table 2. Wood Duck* Nesting Results for Massachusetts Study Areas, 1975.

Area	Number of Available Boxes	Number of Nest Starts	Number of Successful Nests	Number of Ducklings Produced
Great Meadows N. W. R.	31	17	15	167
Greenough's Estate	26	12	8	83
Estabrook Pond	16	12	10	121
Buttrick's Estate	16	7	6	58
Ayer Game Farm Pond	10	0 (1)*	0 (1)	0 (8)
Breeding Pond	26	19 (1)	13 (0)	165 (0)
Chaffins Pond	7	0	0	0
Fisk Mill Pond	16	12 (1)	9 (1)	109 (11)
Nipmuc Pond	15	1 (1)	1 (1)	12 (10)
Long and Muddy Ponds	15	6	6	80
Spruce Pond	9	0	0	0
Turkey Hill Brook	10	3	3	35
Westboro Management Area	11	1	1	11
Bristol-Blake Complex	38	18	16	181
	246	108 (3)	88 (3)	1022 (29)

* Numbers in parentheses( ) refer to hooded merganser data.
Forty-four percent (44%) of boxes were used.
Eighty-one percent (81%) of nest starts were successful.
Number of ducklings produced per successful nest was 11.7.

Two hens hatched off broods before raccoons broke into the pen. Most nest boxes were equipped with standard tunnel predator guards but five boxes were not. Four of these boxes were used as well as one nesting cylinder. During the initial raccoon raids, at least two incubating hens were known to have been killed by raccoons and three additional nests destroyed. The point of entry used by the raccoon was found and sealed but in subsequent weeks the animals broke into the pen at two other points. The raids were finally terminated when two adult female raccoons were trapped and destroyed after live traps failed to secure the animals. During the weeks that raccoons were able to harass the nesting females, two more nests were destroyed and three other hens abandoned due to molestation. Broods that did hatch off were scattered and some mortality probably resulted. Rank vegetative growth in the pens made counting surviving wood ducks impossible but probably not more than two dozen wood ducks reached flight stage from all the ducklings that did hatch.

Production Data. Production data was gathered incidental to field work involved in Jobs 1, 2 and 4. The data is presented in Table 2. There were 108 wood duck nest starts of which 88 were successful on the 14 central Massachusetts study areas. The successful nests produced 1,022 ducklings, down 10.4 percent from 1974, but up 48.8 percent over 1973, 100.0 percent over 1972 and 80 percent higher than in 1971. Three hooded mergansers also brought off successful clutches totaling 29 ducklings.

Production data was also collected from five southeastern study areas in conjunction with Job II-1. There were a total of 75 nest starts of which 46 successful nests produced 587 ducklings. Duckling production was up 5 percent over 1974, 7.5 percent higher than 1973, 26 percent higher than 1972 and 70.5 percent higher than 1971. Most of the increase in production was due to nesting efforts at Meadow Lea Bog, Easton (357 ducklings in 1975 versus 151 in 1971.

Literature Cited:

Heusmann, H. W. 1975. Several aspects of the nesting biology of yearling wood ducks. J. Wildl. Manage. 39(3):503-507.

MASSACHUSETTS DIVISION OF FISHERIES AND WILDLIFE
Bureau of Wildlife Research and Management

Approved: _____
Arthur W. Neill, Superintendent

Prepared by: _____
H. W. Heusmann, Waterfowl Biologist

Date: _____

PERFORMANCE REPORT

State Massachusetts

Project No. W-42-R-9

Project Title Massachusetts Waterfowl Research Program

Project Type Research

Period Covered: 14 January 1975 to 13 January 1976

- - - - - - - - - - - - - - - - - - - -

Work Plan V Gosling Transplant Study

Work Plan Objectives: To establish breeding populations of geese on suitable habitats in the state by gosling transplants and conduct breeding pair surveys in the vicinity of gosling release sites

Job V-1 Gosling Transplant Study

Job Objectives: To transplant goslings from locations where populations are large and expanding and release them at suitable goose producing sites where there is a possibility of developing a huntable population.

Summary A total of 43 goslings were released on two sites in central and western Massachusetts. A total of 70 geese were banded during 1975.

Completion Target Date: 31 October 1979

Status of Progress: On schedule.

Deviations in Progress: None

Recommendations: Use of neck collars should be suspended until field checks confirm whether or not collar retention in adult stages has been achieved. New sources of goslings and new release sites should be searched for.

Cost: $965 (21-3/4 man days plus mileage)

Remarks: The pretrapping Framingham-Southboro goose census indicated that 151 geese (including goslings) were present during June of 1975. This compares to counts of 162 in 1974, 191 in 1973, 187 in 1972 and 159 in 1971. No broods were observed in the Southboro Aqueduct flock but at least three broods totaling 13 goslings were seen on the upper reaches of the Southboro Reservoir. The goose flock in this area has been building up in recent years.

Publication approved by Alfred C. Holland, State Purchasing Agent #5146

The first gosling drive (24 June) was made at Framingham Reservoir No. 1 and yielded 23 goslings which were transported to Bradley Brook Reservoir, Russell, and released after being banded with Federal and colored leg bands and collared with orange vinyl plastic, numbered neck collars. Four adult females captured with the goslings were banded and released on the Framingham trapping site.

The second drive was made 9 July at the Bristol-Blake State Reservation, Norfolk. Twenty goslings were captured, marked and transported to the Gate 18 pond on the Prescott Peninsula of the Quabbin Reservoir. Two adult Canadas were banded and released at the trap site as were five other previously banded adults.

After the Russell goslings were released, approximately half the birds left the release site, climbed over a mountain and appeared in the center of Russell where they stayed on the Westfield River. A number of the Quabbin birds trekked overland to Gate 17. One was eventually found dead (killed by a predator) in the vicinity of Gate 17 while a second bird was killed in a Bailey beaver trap after returning to the release pond. The tendency for goslings to leave release sites shortly after being liberated continues to be a problem in this study despite releasing birds in what appears to be suitable habitat.

Incidental to the gosling transplants, Connecticut Valley Wildlife Management District personnel banded 18 geese on a private pond in Granby. One adult female was wing-tagged and bore a Pennsylvania State band, M-817.

Three nuisance geese were also banded during 1975.

MASSACHUSETTS DIVISION OF FISHERIES AND WILDLIFE
Bureau of Wildlife Research and Management

Approved: _____
Arthur W. Neill, Superintendent

Prepared by _____
H W Heusmann
Waterfowl Biologist

Date _____

PERFORMANCE REPORT

State: Massachusetts Project Number: W-42-R-9

Project Title: Massachusetts Waterfowl Research Program

Project Type: Research

Period Covered: 15 January 1975 to 14 January 1976

Work Plan VI: Park Waterfowl Project

Plan Objectives: To determine the size and species composition of park waterfowl populations, their locations, movements, biology, and population dynamics; and to determine the value of park waterfowl populations in economic and recreational terms.

Job VI-1: Population Biology of Park Waterfowl Populations

Job Objectives: To determine the size and species composition of park waterfowl populations, their locations, movements, biology, and population dynamics.

Summary: A combined late spring and midsummer survey of wetlands located within the greater Boston area revealed brood production on 41 percent of 143 wetland areas, averaging 2.4 broods per area. A total of 2,673 waterfowl were reported of which 675 were ducklings. A total of 1,288 waterfowl were banded in park situations during 1975.

Completion Date: 31 October 1979.

Progress Status: On schedule.

Deviations: None

Recommendations: Continue to band park waterfowl in conjunction with Jobs II-1 on a preseason and winter basis and plan future inventories to monitor statewide population changes.

Cost: $1,870 (40-1/4 man days plus mileage) excluding banding activities.

Remarks: Procedures: The 1974 summer census indicated limited brood production in the greater Boston metropolitan area. This area is delineated primarily by Massachusetts Highway Route 128 and consists of approximately 837 square kilometers (323 sq. miles). The survey, however, was run in late July when identification of broods was difficult. In order to get a better indication of waterfowl reproduction, a late spring survey (19-23 May) and a second, midsummer survey (30 June to 3 July) was conducted in 1975.

Publication approved by Alfred C. Holland, State Purchasing Agent #5146

Efforts were made to check all wetlands in the greater Boston area. Location of wetlands was determined primarily by use of 7-1/2 minute series U. S. Geological Survey topographical sheets. When newly-created wetlands were known to exist they were also checked. Only areas indicated on the maps as possessing some open water were checked. Rivers and brooks could only be spot checked in areas where ducks were likely to congregate. The exception was the Charles River which was surveyed by canoe from where it first entered the greater Boston area to Waltham where a series of small dams hindered further observations. Each spot check was counted as one area except the Charles River which was divided into an upper and lower section. Aside from the Charles River, all checks were made from vehicle or on foot.

Two crews of two personnel each were employed each day of the survey except 30 June and 1 July when a third crew of two was added.

Areas found to no longer exist during the 1974 survey were deleted from the 1975 checks. Further areas were eliminated in 1975 when late spring checks revealed the wet areas had dried up. Unusually hot weather encountered during the late spring survey hampered locating waterfowl since birds were often out of sight in shaded areas. In order to avoid this problem during the midsummer survey, efforts were made to contact people living around ponds in order to learn if duck broods were normally present. A newspaper column in the Boston Evening Globe, 11 June, was also designed to elicit responses concerning the location of broods. Finally, the files of the Massachusetts Audubon Society were checked for cooperators reporting broods of waterfowl as part of the Massachusetts Breeding Bird Atlas project. Cooperators who reported broods were contacted by telephone to learn the exact locations and circumstances involved in the sightings. When such sightings were duplicates of Division reports, they were eliminated.

Findings: The spring survey involved checking 136 areas including the two sections of the Charles River. Mallards were observed on 55 areas, black ducks on 13, with a total of 56 areas supporting waterfowl populations. Division personnel observed nine broods totaling 50 ducklings on six areas. Three areas had two broods each. Four additional broods totaling 19 ducklings plus one brood of wood ducks were reported on five additional areas by cooperators.

A total of 780 mallards, 61 black ducks, eight wood ducks and two ring-necked ducks were counted, including ducklings. The late spring check was apparently too early for any major hatch-off. The broods seen were all in the downy stage and a number of observations of lone drakes indicated ducks were still laying or in early stages of incubation.

The midsummer census resulted in a much higher brood count. During this period, a total of 143 areas including two sections of the Charles River were checked by Division personnel and/or cooperators. Waterfowl were observed on 82 or 57 percent of the areas. Mallards were reported on 75 areas, black ducks on 16 areas and wood ducks on eight.

Brood counts were as follows:

110 mallard broods totaling 489+ ducklings on 52 areas.
13 black duck broods total 58+ ducklings on 5 areas.
6 wood duck broods totaling 24+ ducklings on 6 areas.
129 duck broods totaling 571+ ducklings on 55 areas.

The "+" after duckling totals indicates broods were reported but no sizes given. By multiplying the number of broods of unknown size by the average known brood size for that species, I arrived at total ducklings counts of 517 mallard ducklings, 63 blacks and 36 wood ducks, or 616 ducklings in all.

Waterfowl broods were reported on 38 percent of the areas checked, with mallards present on 36 percent of the areas. The number of broods per area ranged from one to 18. Breakdown of known mallard brood sizes was as follows:

1 duckling - 8 broods
2 ducklings- 10 broods
3 ducklings- 9 broods
4 ducklings- 19 broods
5 ducklings- 16 broods
6 ducklings- 13 broods
7 ducklings- 7 broods
8 ducklings- 4 broods
9 ducklings- 3 broods
10 ducklings- 3 broods
11 ducklings- 2 broods

In general, the smaller broods were older birds while the largest broods were of ducklings still in the downy stage.

The total midsummer count consisted of 2,525 mallards, 116 black ducks and 32 wood ducks on 80 out of 143 areas checked. During a midsummer count conducted 29 July to 2 August 1974, a total of 2,071 mallards and 248 black ducks were counted on 57 out of 143 areas checked. More ducks were reported this summer because cooperator reports were used as well as Division observations, and the later count in 1974 meant more time elapsed during which ducklings were subject to mortality.

When data from the late spring and midsummer counts are added and duplications eliminated, the tally is as follows:

121 mallard broods totaling approximately 585 ducklings on 54 areas
13 black duck broods totaling approximately 60 ducklings on 5 areas.
7 wood duck broods totaling approximately 30 ducklings on 5 areas.

141 duck broods totaling approximately 675 ducklings on 59 areas.

This is an average of 2.4 broods per area with brood production on 41 percent of the wetlands in the greater Boston area. Broods were reported for all types of habitat from small ponds, a sixteenth of an acre in area, to large lakes and major rivers. Broods were observed on areas that could have existed in the remote reaches of the Berkshires except for the fact that a thousand or more people were living within a quarter-mile radius and in park situations where nesting cover was scant. The brood counts are minimal figures as not all potential habitat could be checked. Cooperator reports of nesting ducks were not included in this census even though the nests were reported in marshy areas not checked by Division biologists. Actual duckling production must be somewhat higher than the survey revealed. Mortality of ducklings, however, must also be high. Age ratios of summer-trapped birds in park situations have always indicated a large proportion of adults. Of the 2,525 mallards reported for the midsummer census, the 517 ducklings comprised only 20.5 percent of the population. This observation supports age ratio data.

Banding of park waterfowl is carried out under Job No. II-1, Coastal and Inland Waterfowl Banding. During the winter of 1975, 959 mallards, 37 black ducks, 124 mallard x black hybrids, 3 pintail and 4 American coot were banded. The preseason trapping program resulted in the banding of 147 mallards, 8 mallard x black hybrids, 3 mallard x domestics and 2 black ducks.

MASSACHUSETTS DIVISION OF FISHERIES AND WILDLIFE
Bureau of Wildlife Research and Management

Approved: _____
Arthur W. Neill, Superintendent

Prepared by _____
H W Heusmann, Waterfowl Biologist

Date _____

JOB PERFORMANCE REPORT

State Massachusetts

Project No. W-42-R-9

Project Title Massachusetts Waterfowl Research Program

Project Type Research

Period Covered 15 January 1975 to 14 January 1976

- -

Work Plan VII Black Duck Imprinting Study

Work Plan Objectives: To develop a population of black ducks imprinted to nesting in elevated nesting cylinders and to measure the degree of establishment of imprinted birds released during the breeding season on selected areas where nesting structures have been erected.

Job VII-1 Black Duck Imprinting Study

Job Objectives: To develop a population of black ducks imprinted to nesting in elevated nesting cylinders and to measure the degree of establishment of imprinted birds released during the breeding season on selected areas where nesting structures have been erected.

Summary A total of 125 female and 111 male black ducks were released on six sites during the spring of 1975. Twenty-one additional female and ten male blacks were released at Quabbin Reservoir in July. One or more nests were established on five of the six release sites. Nests were established by eleven of the 1975 released hens while three hens released in previous years returned to nest. A total of 110 black ducklings were hatched in cylinders.

Completion Target Date: December 1979.

Status of Progress: On schedule.

Deviation in Progress: Results indicate the project should be terminated.

Recommendations: Termination of this project was recommended in the 1974 season Performance Report, barring no drastic changes in nesting success during the 1975 season. Since no exceptional improvement in reproductive efforts was observed in 1975, that recommendation still stands. Remaining breeding stock should be liberated on the Quabbin Reservoir

Publication approved by Alfred C. Holland, State Purchasing Agent #5146

in the spring of 1976. Follow-up studies of nesting efforts should be made in 1976 and 1977 on all areas where releases were made in prior years. Final results should be presented at the Northeast Section of The Wildlife Society.

Cost: $3,500 (53-1/2 man days plus mileage, feed and materials)

Remarks: Releases. Eighteen male and 18 female black ducks were placed in a holding pen on the Ipswich River Audubon Sanctuary, Topsfield, on 3 March and released the first week of April. These birds were held on Pintail Pond, a small area enclosed by four-foot (1.2m) chain link fence. The pond had two nesting cylinders erected on it and two more immediately outside the fence in a channel of Hassocky Swamp. Three cylinders were present on the opposite side of the swamp. A second liberation of eight male and 14 female blacks was made on 9 April, without prior holding, on the Bunker Meadow area of the sanctuary where four cylinders were present.

Twelve male and 12 female black ducks were released at the Bristol Blake State Reservation, Norfolk, 25 March; 15 male and 15 females at Great Cedar Swamp, Hanson, 31 March; 36 males and 38 females on two Quabbin beaver ponds, 4 April; 15 males and 15 females on a Swift River Wildlife Management Area, Belchertown, beaver pond, 4 April; and seven males and 13 females at the Ayer Game Farm pond, 8 April. All releases were made without prior holding with the exception of the Ayer release since the pond bordered the duck pens, but feed hoppers were set up prior to the release on all areas as were nesting cylinders.

A single release of ten male and 21 female surplus breeders was made on a Quabbin beaver pond, 18 July

Nesting Efforts. Black ducks established nests in cylinders at five of the six release sites. None of the 1975 blacks released on Pintail Pond of the Ipswich River Sanctuary were found nesting, but both cylinders on the pond were used. One was used by a mallard x black duck hybrid that was already banded, but not by Division personnel. Recovery data was not available at the time of this report but I believe the bird was banded by Parker River National Wildlife Refuge personnel in Newbury. The second cylinder was used by a black duck liberated during this study the spring of 1973. No nesting blacks were handled that year and it is possible that the bird was one of two females that nested in cylinders on Hassocky Swamp in 1974. The first definite record of the duck was when Parker River refuge biologists trapped the bird at Newbury. during February 1975. One female from the release at Bunder Meadows established a nest in a cylinder on that pond. All cylinder nests established on the sanctuary were successful.

One mallard and three black ducks established nests in cylinders at Bristol Blake. One black duck was a 1975 released bird. A second black duck nest was that of a hen released in 1974. The hen was not recorded as definitely nesting in 1974, but used the same cylinder in which a nest was established that year, but the hen was never handled. It was believed to be the same bird. The third black duck nest was by a 1973 released bird. No nesting hens were handled that season at Bristol Blake and in 1974 only two of four nesting blacks were handled, neither of which was this bird. The fourth nest was by a wild mallard. All nests were successful.

There were a total of five nest starts by black ducks on Quabbin beaver ponds. No nest attempts were made at release site, Pond 1, but there were three starts on release site, Pond 2; a random nest of one egg in cylinder X2, two eggs in a cylinder incubated by a hooded merganser (X5) and an incubated nest of nine eggs in cylinder X8. Unfortunately, the black duck abandoned after being handled. There was a successful nest of eight eggs on Pond 3 and one of seven eggs on Pond 8. All hens were 1975 released birds.

The Swift River Wildlife Management Area beaver pond was a new area. The beaver pond was three years old and established by Division-transplanted beaver. All three cylinders present were used and all three nests were successful. Only two hens were handled but all three were assumed to be 1975 releases.

A second new area for releases was the Ayer State Game Farm pond. Three of the five available cylinders were used, all successfully, by 1975 released birds. The only area where no nests were established was Great Cedar Swamp, Hanson, a cranberry bog reservoir. One pair of released blacks was observed throughout the nesting season buth the only nest established in a cylinder was by a wood duck. (Nesting results are summarized in Table 1.) A total of 110 black ducklings out of 130 eggs laid left the cylinders. Eleven of the 127 females released were known to have established nests.

Game Farm Production. No effort was made to artificially incubate and rear black ducks in 1975. Instead, hens were allowed to establish their own nests in cylinders within the pen. A total of 22 nests had been established when raccoons broke into the pen. Four nests hatched prior to raccoon predation, but 14 nests were destroyed. The raccoons also killed at least four hens. Four nests were initially undisturbed but two hens had abandoned by the end of the week and a third was killed on the nest as was the fourth hen several days later. Two more nests were established but neither were successful. Raccoon tracks were observed in the pen over a two-week period. Two raccoons were finally trapped, ending the depredations. Production, however, was nearly eliminated. Only 11 ducklings survived to flight stage. These were released on a Quabbin Reservoir beaver pond along with surplus adult breeders.

Table 1. Black duck nest cylinder usage on study area release sites, 1975.

Area	Town	Site	Box Number	No. of Eggs	No. Hatched
Ipswich River Audubon Sanctuary	Topsfield	Pintail Pond	C1	11[1]	11[1]
			C2	10	10
		Bunker Meadow	C9	10	9
Bristol Blake State Reservation	Norfolk		C	7	6
			D	11	10
			E	9	9
			J	9[2]	8[2]
Quabbin Reservoir Beaver Ponds	New Salem	Pond 2	X2	1	0
			X5	2	0[3]
			X8	9	0
		Pond 3	X2	8	8
		Pond 8	X5	7	7
Swift River Wildlife Management Area	Belchertown		X1	7	3
			X2	7	6
			X3	9	9
Ayer State Game Farm	Ayer		2	14	14
			5	11	11
			7	8	8
Great Cedar Swamp	Hanson		M2	11[4]	11[4]
		Total		161	140
		Black Duck Only		130	110

[1] Mallard x black hybrid nest
[2] Mallard nest
[3] Nest taken over by hooded merganser
[4] Wood duck nest

MASSACHUSETTS DIVISION OF FISHERIES AND WILDLIFE
Bureau of Wildlife Research and Management

Approved: _____
Arthur W. Neill, Superintendent

Prepared by _____
H W Heusmann
Waterfowl Biologist

Date _____

PERFORMANCE REPORT

State: Massachusetts Project Number: W-42-R-9

Project Type: Research and survey

Project Title: Massachusetts Waterfowl Research Program

Period Covered: 15 January 1975 to 14 January 1976

* * * * * * * * * * *

Study No. VIII Waterfowl Inventory Flights

Study Objectives: To inventory waterfowl populations throughout the fall and winter months and in conjunction with special or experimental waterfowl seasons.

Job VIII-1 Waterfowl Inventory Flights

Job Objectives: To inventory waterfowl populations throughout the fall and winter months and in conjunction with special or experimental waterfowl seasons.

Summary: A total of 121,016 waterfowl was counted during the January 1976 winter inventory, up 0.6 percent over 1975 and 14.6 over the previous seven-year average. Black duck numbers (17,800) were up 11.5 percent over 1975 but down 18 percent from the ten-year average. Scaup, sea duck and Canada goose numbers were down from last year while mallard, goldeneye, bufflehead and merganser numbers were up.

Target Date: December 1979

Status of Progress: On schedule.

Significant Deviations: None

Recommendation: Continue inventories as requested by the U.S. Fish and Wildlife Service and Atlantic Waterfowl Council.

Cost: $1,380 (15 man days plus plane rental and pilot fees)

Remarks: Procedures: Two Cessna 172 aircraft were used to inventory waterfowl along coastal Massachusetts including Cape Cod and the Islands. Each aircraft was manned by a commercial pilot, a recorder and two observers. Data were tabulated by species and zones. Weather conditions, flight problems and visibility factors were recorded for each flight. The winter inventory data was submitted on standard forms to the Fish and Wildlife Service. Flights were made on 18 November 1975 and 6-7 January 1976.

Publication approved by Alfred C. Holland, State Purchasing Agent #5146

Table 1. Winter Inventory, Coastal Massachusetts and Off-Shore Islands, January 1976

Area	Year	Mallard	Black Duck	Scaup	Goldeneye	Bufflehead	Old Squaw	Scoter	Eider	Merganser	Canada Goose	Brant	Miscellaneous	Total
Salisbury to Wingaersheek Beach	1972	130	4,862	60	55	90		1,400	1,800		360			8,837
	1973	10	5,035	330	1,510				1,350		310			8,545
	1974	130	8,164	1,575	505	5		35	65		1,468			11,947
	1975	100	3,918	2,550	200	40			475	15	2,207			9,505
	1976	22	2,341	2,900	290	85			10	52	927			6,627
Cape Ann to Gloucester Harbor	1972	10	1,995		210	5		50	660	6	50			3,016
	1973		545		175	35		25	1,535	11	30			2,356
	1974	80	2,870		35	6			40	29	300			3,360
	1975		568	25	220	17			45	25	275			1,175
	1976		455		273	11			236	111	15			1,101
Magnolia to Winthrop Standpipe	1972		605	3,090	375	90		470	4,995	21	10			9,656
	1973	15	695	2,660	385	46		1,080	7,165	15				12,061
	1974		160	70	469	130			15,080	22				15,925
	1975	10	287	605	210	40		70	8,295	65				9,582
	1976		350	1,475	635	77		60	9,635	412			250	12,669
Winthrop Standpipe to Cohasset Beach	1972		1,083	6,640	122	15		735	850	2				9,447
	1973	60	1,440	4,130	392	45		35	1,949	39				8,136
	1974		400	3,090	66	25		55	710	35				4,381
	1975		475	550	95	20		17	1,210	35				2,402
	1976		425	490	165	90		225	1,800	140				3,335
Cohasset Beach Tower to Rocky Point	1972		4,027	30	70	10		326	17,220		1,541			23,224
	1973	40	2,270	30	75				525	7				2,947
	1974	50	2,677		89	80			8,835		1,400			13,131
	1975		1,072	600	80	5		7	11,178	5	1,729			14,656
	1976	10	427	10	110	30		35	8,190	245	388			9,445

Table 1. Winter Inventory (Continued)

Area	Year	Mallard	Black Duck	Scaup	Goldeneye	Bufflehead	Old Squaw	Scoter	Eider	Merganser	Canada Goose	Brant	Miscellaneous	Total
Rocky Point to Cape Cod Canal	1972				5			330	780					1,115
	1973			25				60	485					570
	1974				20				910					930
	1975		5		5			5	156	3				174
	1976							4	281	2				287
Cape Cod to Nobscusset Point	1972	10	299	16	50	42		834	1,888	9	503	20		3,671
	1973	55	2,223		57	16	10	30	1,218	20	568			4,197
	1974	74	1,821	5	49		1[illegible]	10	1,460	22	470			3,923
	1975	70	2,241		64	55	5		1,498	43				3,976
	1976	1	1,408		2	2		4	353	46	956		30	2,802
Nobscusset Point to Great Island	1972	2	1,464		14	126	10	25	342		5,790	2,875		10,648
	1973		232		57	90	25	60	479	25		325		1,959*
	1974	1	710		85	61	3	22	170	11	1,030	32		2,130
	1975		782		41	5		225	605	85	1,568	103		3,414
	1976	5	1,002		111	56	30	310	6,766	165	683	760		9,888
Great Island to Race Point	1972	2	1,286		63	12	10	234	709	32	25			2,373
	1973		145		50	38	2	60	272	10				602*
	1974	52	175		76	35		7	550	43		300		1,238
	1975	120	530		42	45			235	81				1,053
	1976	30	234		274	7			11,570	104	23		2	12,244
Nauset Light to Monomoy Point	1972	481	5,104	335	2,323	698		190	4,832	22	2,436		30	16,771
	1973	37	3,314		350	365		250	2,200	10	1,851			8,377
	1974	145	1,239		125	503	100	115	14,795	10	2,856			19,888
	1975	160	2,008	100	584	549		10	2,703	192	3,987	420	100	10,813
	1976	47	4,620		3,751	1,284	152	127	3,943	501	5,898		55	20,378

Table 1. Winter Inventory (Concluded)

Area	Year	Mallard	Black Duck	Scaup	Goldeneye	Bufflehead	Old Squaw	Scoter	Eider	Merganser	Canada Goose	Brant	Miscellaneous	Total
Chatham to Buzzards Bay	1972	16	573	538	905	80		4,910	1,660	11	115			8,808
	1973		548	655	1,230	650	18	135	1,565	114	645			5,560
	1974	399	279	4,050	2,335	730	36	1,090	8,032	310	607			17,920
	1975	303	462	1,715	1,858	808	4	40	2,015	289	839			8,333
	1976	504	1,697	5,485	4,280	1,770	10	1,886	1,091	322	1,859		372	19,276
Mount Hope Bay to Taunton River	1972	10	585	4,500	245	8		27	35	20	1,397			6,827
	1973		550	940	95	5			40					1,630
	1974	10	559	4,390	120	300				25				5,404
	1975	75	745	4,050	120	147					15			5,152
	1976	30	472	2,000	760		5			206	482		894	4,849
Quick Sand Point to Sconticut Neck	1972		635	1,915	949	175		1,365	2,800	3	45		2	7,887
	1973		485	740	1,065	135		220	410	55	1,065		180	4,359
	1974	20	444	863	325	225			80	17	1,090		135	3,199
	1975	67	866	7,085	1,722	433			277	180	1,415		169	12,214
	1976	40	770	505	537	255		72		165	1,112		40	3,496
Martha's Vineyard and Elizabeth Islands	1972	14	1,158	1,510	1,296	300		2,305	1,545	96	1,684		180	10,718
	1973	158	1,015	515	1,300	569	123	1,595	1,735	153	943		239	8,492
	1974	102	1,644	25	2,987	175	45	1,465	3,192	461	843		89	11,138
	1975	55	1,510	270	1,272	615	67	1,194	540	742	1,680		356	8,301
	1976	173	1,890	428	1,121	850	34	542	693	284	1,191		71	7,277
Nantucket	1972		902	775	716	63	4	740	4,695	88	383			8,366
	1973	50	733	310	805	210	67	725	6,605	69	319		3	9,896
	1974	95	1,143	220	525	451	85	525	8,385	45	775		379	12,628
	1975	210	510	910	927	419	116	7,752	17,573	483	490		118	29,508
	1976	375	1,709	1,460	1,006	256	38	1,598	1,328	457	525		831	9,310

* Includes unknowns.

Table 2. Massachusetts Winter Inventory Waterfowl Composition Breakdown and Percent Change from 1975 and Previous Ten-Year Average

Group	1976	1975	Percent Change from 1975	Ten-Year Average	Percent Change from Previous Ten-Year Average
Black Duck	17,800	15,979	+ 11.5	21,720	- 18.0
Mallard	1,237	1,170	+ 5.7	607	+ 103.7
Merganser	3,212	2,243	+ 43.2	513	+ 525.9
Scaup	14,753	18,460	- 20.1	15,295	- 3.5
Goldeneye	12,795	7,440	+ 72.0	6,369	+ 100.9
Bufflehead	4,771	3,076	+ 55.1	1,623	+ 194.0
Sea Ducks	49,847	56,317	- 11.5	65,156	- 23.5
Canada Goose	13,577	14,205	- 4.4	9,934	+ 36.7
Canvasback	1,213	160	+ 658.1	127*	+ 855.1*
All Waterfowl	121,016	120,278	+ 0.6	105,560*	+ 14.6*

* Seven-year average.

Findings: The two weeks preceding the annual winter inventory flights were characterized by subfreezing temperatures and heavy snowfall along the northern half of coastal Massachusetts. This resulted in the freezing over of all salt marshes and tidal creeks, inland freshwater ponds, coastal salt water and brackish ponds as well as extensive ice conditions on major rivers and protected bays and harbors. Ice conditions on such bays led to the freezing over of some mussel flats, limiting food supplies to a slight degree.

A total of 121,016 waterfowl was counted (Table 1). This was a 0.6 percent increase over the 1975 count and up 14.6 percent over the previous seven-year average (Table 2); black ducks (17,800) were up 11.5 percent from 1975 but down 18 percent from the ten-year average. Mallard numbers were up slightly over 1975 (1,237 versus 1,170) and 104 percent higher than the ten-year average. Scaup populations (14,753) were down 20 percent from 1975, but goldeneyes (12,795), bufflheads (4,771) and mergansers (3,212) were all up substantially over both the 1975 count and the ten-year average. The increase in bufflehead and merganser counts over the last few years is probably due to better identification of the birds as well as an actual increase in numbers.

Sea ducks were down 11.5 percent from 1975 and 23.5 percent from the ten-year average, due primarily to a drop in the eider count. Sea duck populations fluctuate widely from year to year in Massachusetts. The Canada goose count was down 4.4 percent from last year but up 36.7 percent from the ten-year average. This species has steadily increased in numbers in Massachusetts over the last twenty years.

Mention should be made of exceptionally high canvasback counts for the state (1,213, up 658 percent over 1975 and 855 percent over the seven-year average). This increase was due to the presence of a flock of 890 birds on the Taunton River. Federal Game Agent James Van Weelden reported a flock of 3,000 on the river the day before the area was flown.

The annual goose flight was flown on 18 November 1975. A total of 5,691 Canada geese and 1,855 brant were seen coastally while an additional 320 Canada geese were reported inland by ground observers.

Massachusetts Division of Fisheries and Wildlife
Bureau of Wildlife Research and Management

Approved: _____
Richard Cronin, Superintendent

Prepared by _____
H W Heusmann, Waterfowl Biologist

Date _____

PERFORMANCE REPORT

State: Massachusetts Project Number: W-42-R-10

Project Title: Massachusetts Waterfowl Research Program

Project Type: Research and Survey

Period Covered: 15 January 1976 to 14 January 1977

* * * * * * * *

Work Plan II: Coastal and Inland Waterfowl Banding

Work Plan Objectives: To meet banding quotas set by the U. S. Fish and Wildlife Service and conduct other banding operations as they relate to research projects.

Job II-1: Coastal and Inland Waterfowl Banding (Winter Segment)

Job Objectives: To meet the Federal banding quota of 1,000 black ducks for the state of Massachusetts.

Summary: A total of 1,713 birds were banded during the 1976 winter trapping program. During coastal trapping operations, 620 black ducks, 91 mallard x black hybrids, 46 mallards, and 15 pintails were banded. Trapping in park situations resulted in the banding of 769 mallards, 89 mallard x black hybrids, 45 black ducks, 5 wild x domestic crosses and 33 American coot.

Target Date: 1979

Status of Progress: On schedule

Deviations: None

Recommendations: Continue banding efforts to meet Federal quotas.

Cost: $4,900 (79 man days plus mileage and bait)

Remarks: Coastal (Black Duck) Trapping

January of 1976 was an exceptionally cold month, with bays and harbors freezing over for extended periods for the first time in five years. This greatly aided trapping operations on the coast. Full advantage could not be taken of the weather on some locations because Dr. Ray Morgan of the University of Maryland wished to blood sample some ducks and was not going to arrive in Massachusetts until the last week of January.

February temperatures went to the other extreme, and the month turned out to be one of the warmest Februarys in recent history. Bait trapping success was very low, with little trapping being done after the first week.

Publication approved by Alfred C. Holland, State Purchasing Agent #5146

Table 1. Summary of winter coastal trapping (black duck trapping) during 1976

Area	Black Duck	Mallard x Black Hybrid	Mallard	Total	Previously Banded Birds
Boston					
Lynn Harbor	41	21		62	13
Wollaston Beach	37	14	1	52	8
Subtotal	78	35	1	114	21
Plymouth-Duxbury					
Standish Shores	86	17	1	104	31
Myles Standish Homesite	81	9	2	92	16
Eagles Nest Point	51	7		58	4
Eel River	49	7		56	2
Subtotal	267	40	3	310	53
Buzzards Bay					
Canal entrance	34	2		36	
Wareham River	23	1	4	28	5
Peters Neck	31	1		32	6
Lewis Point	61	2	14	77	9
Weweantic River	58	4	3	65	10
Agawam River	1	1	2	4	1
Subtotal	208	11	23	242	31
Mid-Cape					
Indian Trail	67	5	19	91	32
All areas total	620	91	46	757*	137

* Fifteen pintails were also banded.

Table 2. Summary of winter 1976 inland (park) waterfowl banding efforts*

Area	Black Duck	Mallard x Black Hybrid	Mallard	Total	Returns from Prior Years
Town Hall Pond, Wellesley	1	14	84	99	52
D. W. Field Park, Brockton	2	4	32	38	25
Forest Park, Springfield	0	0	25	25	11
Norumbega Park, Newton	7	8	60	75	45
Jenny Pond, Plymouth	0	2	11	13	4
Cordage Park, Plymouth	0	7	29	38[1]	11
Flax Pond, Lynn	20	14	57	92[2]	30
Furnace Pond, Pembroke	0	0	50	82[3]	8
Clay Pit Pond, Belmont	2	10	53	65	15
Fulling Mill Pond, Hingham	2	8	78	90[4]	10
Horn Pond, Woburn	0	3	14	17	3
Institute Park, Worcester	0	7	49	56	2
Grays Mill Pond, Westport	11	12	227	251[5]	4
Totals	45	89	769	941	220

[1] includes 2 mallard x domestic hybrids
[2] includes 1 coot
[3] includes 32 coot
[4] includes 1 mallard x domestic and 1 black x domestic hybrid
[5] includes 1 mallard x domestic hybrid

A total of 620 black ducks, 91 mallard x black hybrids, 46 mallards and 15 pintails were trapped by Division personnel and one cooperator at 13 coastal sites in the Boston, Plymouth, Buzzards Bay and mid-Cape areas. One hundred thirty-seven ducks banded in previous seasons were also captured. There was no trapping operations on the outer Cape in 1976 (Table 1). Black ducks made up 80 percent of the ducks captured, hybrids 12 percent and mallards 6 percent.

Dr. Morgan blood sampled approximately 150 coastal-trapped ducks during his four and one-half day stay, collecting samples from all four trapping regions. The project leader collected 93 additional samples from the Boston area after Dr. Morgan's departure. The samples are to be used in determining mallard x black duck hybridization rates by examining electroprolectic profiles of blood proteins.

Parker River National Wildlife Refuge personnel accelerated their trapping activities in 1976 and banded 619 blacks, 66 mallard x black hybrids, 15 mallards and 2 pintails.

Inland (Park) Trapping

A total of 769 mallards, 89 mallard x black hybrids, 4 mallard x domestic hybrids, 45 black ducks, 1 black x domestic hybrid and 33 American coot were banded at 13 park situations. An additional 220 previously banded birds were recaptured (Table 2). Mallards made up 82 percent of the ducks banded, hybrids 9 percent and black ducks 5 percent.

Acknowledgments: The Division of Fisheries and Wildlife would like to extend special thanks to Mr. Taisto Ranta, town warden of Barnstable, for his continuing efforts on behalf of the black duck banding project.

MASSACHUSETTS DIVISION OF FISHERIES AND WILDLIFE
Bureau of Wildlife Research and Management

Approved: _____
Richard Cronin, Superintendent

Prepared by: _____
H W Heusmann, Waterfowl Biologist

Date _____

PERFORMANCE REPORT

STATE MASSACHUSETTS Project No. W-42-R-10

Project Title Massachusetts Waterfowl Research Program

Project Type: Research and Survey

Period Covered: 15 January 1976 to 14 January 1977

Work Plan II Coastal and Inland Waterfowl Banding

Work Plan Objectives: To band a well distributed sample of inland and coastal waterfowl populations preseason and on the wintering grounds in accordance with quotas established by the Banding Committee of the Atlantic Waterfowl Council.

Job II-I Coastal and Inland Waterfowl Banding (Preseason Segment)

Job Objectives: To band a well distributed sample of inland and coastal waterfowl preseason and on the wintering grounds in accordance with quotas established by the Banding Committee of the Atlantic Waterfowl Council.

Summary: A total of 1,502 waterfowl and other birds were banded during the 1976 preseason banding segment. This total includes 9 hand-reared black ducks and 4 hand-reared wood ducks. Wild-banded waterfowl includes 520 wood ducks, 264 mallards, 142 black ducks, 45 mallard x black hybrids, 128 green-winged teal, 38 blue-winged teal, 19 hooded mergansers, 2 baldpate, 1 pintail and 25 Canada geese. Also banded were 47 coot, 4 common gallinules, 10 sora and 3 Virginia rails, 10 pied-billed grebes, 2 black-crowned night herons, 1 American bittern; 32 least, 13 semi-palmated, 5 solitary, and 2 spotted sandpipers, and 7 killdeer. Park-banded birds include 159 mallards, 7 mallard x black, 2 mallard x domestic and 1 black duck.

Target Date: 1979

Status of Progress: On schedule.

Significant Deviations: None

Recommendations: Continue banding efforts to meet Federal quotas.

Cost: $7,700 (188-1/4 man days plus mileage, feed, and materials)

Remarks: Hand-Reared: Nine black ducks and four wood ducks were hand-reared and released by Cooperator David Risch of Foxboro, Massachusetts.

Publication approved by Alfred C. Holland, State Purchasing Agent #5146

Nest Trapping. While conducting wood duck production study project W-42-R:IV-1, 2 and 4, 51 wood ducks, 19 hooded mergansers, two mallards and one black duck were captured in artificial nesting structures and banded.

Goose Trapping. A total of 25 Canada geese were captured and banded on 1 July by the drive-trapping methods. This operation was performed under Gosling Transplant Program, W-42-R:V-1.

Shore Bird Mist Netting. Division cooperater Lee McLaughlin ran a shore bird banding program for the third year. He mist netted shore birds on three occasions in July and twice in September, utilizing the Westboro Suasco flood impoundment in Westboro and Rice City Pond in Uxbridge. He banded a total of 32 least, 13 semi-palmated, five solitary and two spotted sandpipers and seven killdeer.

Park Waterfowl Project. A total of 169 ducks were banded in park situations (159 mallards, seven mallard x black hybrids, two mallard x domestic hybrids and one black duck). All but three of the ducks were taken by drive trapping. Three ducks were captured in a cannon net at Horn Pond, Woburn (Table 1).

Table 1. Park waterfowl bandings, preseason, 1976.

Area	Mallard	Mallard x Domestic	Mallard x Black	Black Duck	Total	Recaptures
Norumbega Park Newton	26	2	2	0	30	30
Forest Park Springfield	79	0	2	1	82	70
Look Park Northampton	51	0	3	0	54	38
Horn Pond Woburn	3	0	0	0	3	0
	159	2	7	1	169	138

Preseason Banding. Bait trapping was conducted at the Great Meadows National Wildlife Refuge during August and September. A total of 119 mallards, 46 black ducks, 15 mallard x black hybrids, and 60 wood ducks were banded in 11 trap nights.

Cooperator Jim McDougall of the Ipswich River Audubon Sanctuary bait trapped that area and banded five black ducks and one mallard.

Table 2. Airboat launchings and species captured, summer of 1976.

Location	Date	Mallard	Black Duck	Mallard x Black	Wood Duck	Blue-Winged Teal	Green-Winged Teal	American Coot	Common Gallinule	Sora	Grebe	Virginia Rail	American Bittern	Miscellaneous	Previously Banded	Total
Broad Meadows Sudbury	8/04/76	Generator trouble														0
Turkey Brook Paxton	8/11/76	3		1	10	Curtailed due to loss of exhaust pipes									2	16
Concord River Bedford	8/16/76	Motor trouble														0
Turkey Brook Paxton	8/30/76			2	17										7	26
Ipswich River Topsfield	8/31/76	7	9		21										4	41
Stop River Medfield	9/01/76															0
Lackey Pond Uxbridge	9/02/76	5	6	2	2	2				1						18
Great Meadows Concord	9/03/76	8	6	3	55	2	16	2							23	115
Turkey Brook Paxton	9/13/76	3	1		15										12	31
Ipswich River Topsfield	9/14/76	3	14	2	94	2	6									121

Table 2. (Continued)

Location	Date	Mallard	Black Duck	Mallard x Black	Wood Duck	Blue-Winged Teal	Green-Winged Teal	American Coot	Common Gallinule	Sora	Grebe	Virginia Rall	American Bittern	Miscellaneous	Previously Banded	Total
Fisherville Pond Grafton	9/16/76	46	14	5	22	9	5				3			1*		105
Great Meadows Concord	9/17/76	20	12	4	81	10	67	2	3					1**	26	226
Lackey Pond Uxbridge	9/21/76	4	6	3	1					2	1				2	19
Fisherville Pond Grafton	9/22/76	18	7	4	2	5	3				1	2	1		17	6 60
Ipswich River Topsfield	9/23/76	2	5	1	27		3	3			1				26	68
Great Meadows Concord	9/24/76	20	8	3	49	2	16	26	1		1			1**	35	162
Turkey Brook Paxton	9/27/76				6						2				5	13
Fisherville Pond Grafton	9/29/76				4	1	1			1	1	1			1	10
Great Meadows Concord	9/30/76	4	7		3	5	11	14		6				2***	13	65
Totals		143	95	30	409	38	128	47	4	10	10	3	1	5	173	1,096

* Pintail
** Baldpate
***Black-Crown Night Heron

A total of 923 birds were banded during airboat night lighting operations and 173 previously banded birds were also captured (Table 2). Launchings were made on 19 nights, but operations were curtailed or prevented on three nights due to engine or generator problems. Average capture rate was 58 birds per night, ranging from 0 to 226.

Acknowledgments: The Division of Fisheries and Wildlife wishes to express appreciation for the assistance and cooperation of Linda Gintoli and the staff of Great Meadows National Wildlife Refuge, the Western Massachusetts Duck Hunters Association, and James McDougall of the Ipswich River Audubon Sanctuary.

MASSACHUSETTS DIVISION OF FISHERIES AND WILDLIFE
Bureau of Wildlife Research and Management

Approved: _____
Richard Cronin, Superintendent

Prepared by: _____
H W Heusmann
Waterfowl Biologist

Date _____

PERFORMANCE REPORT

State Massachusetts Project Number: W-42-R-10

Project Title: Massachusetts Waterfowl Research Program

Project Type: Research

Period Covered: 15 January 1976 to 14 January 1977

Work Plan IV WOOD DUCK POPULATION STUDY

Work Plan Objectives: To determine the contribution of dump nesting to total wood duck production; evaluate the use of starlingproof nesting structures by wood ducks; investigate the feasibility of utilizing plastic nesting structures to increase nest sites; to use release of game farm wood ducks to establish nesting populations on the Quabbin Reservoir as well as to reintroduce wood ducks to former nesting areas.

Job IV-1 The Biology of Dump Nesting in Wood Ducks

Job Objectives: To determine the contribution of dump nesting to total wood duck production.

Summary: A total of 19 out of 23 collaring attempts were successful in marking 12 different hens. All 12 hens retained their collars until handled during incubation, 34 to 75 days after collaring. Two hens were confirmed as dump nesters, both of which later established their own nests. There was no significant difference in the return rates of collared and uncollared wood ducks from 1975.

Completion Target Date: December 1977.

Status of Progress: One year behind.

Deviations in Progress: Only two hens were confirmed as dump nesters in 1976. There was no evidence of dump nesting at the Fiske Mill Pond study area in Hopedale, and only one dump nest at Long Pond, Rutland, a second observation area. Although dump nesting was extensive at Breeding Pond, Webster, no females could be confirmed as dump nesters.

Recommendations: Additional potential dump nesting sites should be selected for 1977. Boxes on Breeding Pond, Webster, and at Bristol-Blake, Norfolk, should be moved so as many boxes as possible are observable from a single vantage point. Collars should be removed once individual birds are identified. A manuscript describing the collaring technique should be submitted for publication.

Publication approved by Alfred C. Holland, State Purchasing Agent #5146

Cost: $3,700 (76 man days plus mileage)

Remarks: Procedures. During the 1975 segment of this study, there were 22 instances involving unsuccessful collaring attempts. Only nine collars were found in boxes. The other 13 were missing. In order to determine if hens were being collared but losing them later, dawn observations were made at selected nesting areas in 1976. Different colored collars with individually numbered monel fish fin tags were placed on boxes and a biologist then observed the box from a hidden vantage point. After a laying hen entered a nest box equipped with a collar, the biologist watched the box until the hen left, using 7 x 35 binoculars or a 20x spotting scope to determine if the hen was collared or not.

Collaring Success. Twenty-three attempts were made to collar hens with the marking device described in Performance Report W-42-R-9, Work Plan IV, Job 1. Nineteen attempts were successful, collaring 12 different hens. One hen was collared four times, four hens were each collared twice and seven hens were collared only once. All hens retained their collars a minimum of 23 days as determined by capturing the incubating hen and checking the number on the monel fish tag. These results indicate that collar loss by hens after marking is not significant. Most collars were in good shape even on hens handled up to 75 days after marking.

Of the three attempts that were not successful, two involved a predator guard in which the hens passed through the rubber band and the band remained on the hooks. Project assistant Robert Bellville believed the lower hooks were improperly set and that the hens stepped on the rubber band, holding it in place while they entered the box. In the third unsuccessful attempt the rubber band was knocked off the hooks and found in the box.

Collar Retention. A total of 19 hens collared in 1975 were recaptured in nest boxes in 1976. Eleven hens had no sign of the old collar while eight hens still had a rubber band around the neck, three of which still had part of the vinyl tag attached. One hen had three old rubber bands around its neck although it was recorded as being collared only once in 1975. The box on which it was collared had three chrome colored cloth tags put on it in 1975. These cloth tags were found to be unsatisfactory due to rapid deterioration. The rubber bands on this hen may have been overlooked in 1975 if the tag section was missing. A second hen recorded as uncollared in 1975 was found with an old rubber band around its neck in 1976. Again, a chrome colored tag had been used. (Incidentally, this datum would change the collaring success rate for 1975 from 66 to 69 percent.) Finally, an unbanded hen collared with a blue vinyl tag in 1975 was captured incubating a nest in 1976. This hen must

have picked up one of two tags put on Box 11 at Greenough's Estate, Carlisle. One tag was placed on an old style marking predator guard when six eggs had been laid and the second on a modified guard when the clutch consisted of 17 eggs. Three more eggs were added after the second tag was put on but the nest was abandoned. I believe this bird was involved dump nesting in Box 11.

I also received a report of a female shot locally during October 1975, still retaining both the orange tags she was collared with in May of that year though the monel tags had torn out.

Nest Abandonment. One nest was abandoned due to tagging in 1976. The nest was situated in a light lid box (see Job IV-2 of this segment). Hens in such boxes are flighty. The hen in question entered the box after much hesitation, remained inside for two minutes, then flew out calling. The hen never returned to the box but was found nesting in a different box later in the season, apparently establishing the nest the same day she was collared. This hen flushed repeatedly during nesting checks and finally left the box with only part of her brood.

Return of Collared Hens. To determine if collaring adversely affected the survival of hens after leaving the nest box with their broods, I compared return rates of collared and uncollared hens. Nineteen of 41 (46 percent) wood ducks collared in 1975 returned to nest in 1976; 30 out of 48 (63 percent) uncollared birds returned. While this difference appears substantial, it is not statistically significant (P 0.10 Chi square test of independence). However, since there is no need to further identify hens after banding for this study, the rubber band collars should be removed as a precautionary measure. Further collection of data on return rates during 1977 may shed further light on the effects of collars on the wood duck return rate.

Dump Nesting Activities. Only two hens were confirmed as dump nesting in 1976. The first hen was at Long Pond, Rutland, where two hens nested successfully. There was also one incomplete wood duck and one incomplete hooded merganser nest. A wood duck, unidentified, but suspected to be the dumping hen based on egg measurements, shape and color, deposited two eggs in the merganser nest. Another egg, perhaps from this same hen, was found under Box 8, a dump nest box. Dumping hen 775-36149, was never collared. On the first day of checking, this hen made repeated attempts to enter Box 8 where a collar was in place, but never completed any and finally laid in Box 12. When the boxes were checked the next day, one additional egg was laid in both Boxes 8 and 12. The third day, only the hen from Box 8 showed up to lay. The following day, collars were in place on all boxes. Hen 775-36149 made repeated attempts to enter Box 5 and then Box 12. When

the Box 8 hen arrived and entered that box taking the collar with her, Hen 775-36149 swam over from Box 12, entered Box 8 (the collar had not been replaced) and deposited an egg despite the presence of the original hen. On the fifth day, the Box 8 bird arrived first and entered the box. Hen 775-36149 arrived while the Box 8 hen was laying. Tags were placed on all boxes except 8 and 12. The hen, however, paid attention only to Box 8. She peered through a gap between the entrance hole and the lid and could apparently see the Box 8 hen on the nest. She checked several times and finally entered the box an hour and 15 minutes after arriving on the pond. At this point, I attempted to affix a frame equipped with a collar on the outside of the predator guard to mark the hen on the way out, but the hen flushed and flew to the opposite side of the pond where she deposited an egg on a stump. The next attempt to tag this hen was made three days later. By this time, the hen had apparently established herself in Box 12. The frame was attached after she entered the box but hooks were set too wide and the bird slowly squeezed through the frame without dislodging the rubber band. This hen eventually established her nest in Box 12. Since the hen was never collared, she could not be confirmed as a dump nester, but circumstantial evidence, based on field observations, egg measurements, and color, leads me to believe that this hen deposited two eggs in a merganser nest, two outside of any box, at least two eggs in Box 8, and 12 eggs in Box 12.

A hooded merganser was also confirmed as collared at Long Pond, but apparently abandoned the clutch after being collared a second time.

A second study area at Fisk Mill Pond in Hopedale could not be utilized since there were no dump nests on the area this year.

The third area at Breeding Pond in Webster had at least 14 dump nests out of 26 nest starts, but no hens were confirmed as dump nesters due to a variety of circumstances. In one case, a hen suspected to be dump nesting in Box 17, was collared in the predator guard and immediately backed out. She laid that day in Box 16 which was unused and a short distance away. The hen continued to use the box and a second hen began to dump in Box 16, but both abandoned after the clutch froze. The collared bird later established a successful nest in a third box. Other attempts to confirm dumping hens were thwarted due to erratic laying or dump activities ceasing before collaring operation could commence. Several dump nests were established later in the season after observations ceased.

Because of problems encountered on the above areas, Bristol-Blake State Reservation in Norfolk was selected for limited dawn observations. Dump nests were located in Boxes 2

and 5, but egg deposition was erratic and I believe both dump nests were created by one hen. Hen 775-36438 was collared in Box 2, but did not deposit an egg. A second hen was also collared in the box but did not lay either, and the nest was abandoned. Hen 775-36438 was collared a second time in Box 5 where she did lay and eventually incubated this clutch. Hen 775-36136 entered Box 5, was collared but did not lay, returned to the box an hour later, after Hen 775-36438 had entered and laid and was collared again. This time she did lay and eventually was found incubating a normal clutch in Box 6. I do not know if hen 775-36438 or hen 775-36136 initiated the nest in Box 5, but a total of 20 eggs were deposited. Hen 775-36136 was the second hen confirmed as a dump nester this year and the fourth hen in two years. All four hens later established and incubated nests of their own.

* * * * * * * *

Job IV-2 — Evaluation of Starlingproof Nesting Boxes

Job Objectives: To evaluate wood duck and starling usage of horizontal nesting cylinders and wooden boxes equipped with skylight lids.

Summary: There was no significant difference in wood duck acceptance of light lid boxes and boxes with regular lids, nor was there any difference in abandonment rates although birds in boxes equipped with light lids were flightier than in the control boxes. Starling usage of light lid boxes was significantly lower than for control boxes. This difference was especially pronounced on the eastern Massachusetts study areas.

Completion Target Date: December 1979

Status in Progress: On schedule.

Recommendations: Use of starlingproof nesting cylinders should once again be initiated in selected study areas in the Western Wildlife District. Cylinders elsewhere should be maintained.

Light lids should be used on areas where wood duck-starling competition is a problem. Light lids with 95 x 95mm openings should be used to replace present light lids at Norfolk Correctional Institution and added to half the unused boxes. Southeast District areas should be considered as light lid areas. Light lids (95mm ^{2}) should be put on boxes used by starlings in 1976 at Mill Pond, Littleton, and all boxes at the Delaney site in Stow should be equipped with light lids. Further areas in the Western District should be sought out for testing the light lids to determine more about these populations. Light lids

should be left on eastern Massachusetts areas to determine if starlings learn to use the boxes and the effects of weathering on the lids. A 95 x 95mm skylight equipped lid should be developed and tested for starling acceptance.

Cost: $2,350 (47-3/4 man days plus mileage and materials)

Remarks: Starlingproof Nesting Cylinders. The results of annual checks of wood duck nesting cylinders for the 1970-1975 period will be presented in the Wildlife Society Bulletin. Erratic checking of cylinders in 1976 indicated no substantial change in usage from previous years. (There was one successful wood duck nest in a cylinder at Zanders Pond, Stow, and one at Breeding Pond, the first use of cylinders on those areas.)

Starling Use of Light Lid Boxes. During 1976, only one style of light lid was used for testing purposes, a center mounted opaque skylight of 51 x 133mm dimensions. Light lids were put on every other box on areas where starling nesting was intensive, but wood duck nesting was limited. These areas included Cusky Pond, New Braintree; Sam Kat Kator's and the Sutton System Ponds, Sutton; Hayden and Easterbrook Ponds, Douglas; East Bolton Site, Bolton; Fletchers Pond, Stow; and Pontoosuc and Onota Lakes, Pittsfield; and Leonard Pond, Agawam.

Starlings constructed nests in 12 of 30 boxes (40 percent) equipped with light lids and in 18 of 23 boxes (78 percent) equipped with regular solid lids. The lower usage rate for light lid equipped boxes was highly significant ($P > 0.01$ Chi square test of independence). This difference was even more pronounced on a regional basis. Eight of 11 light lid boxes on four areas in the western half of Massachusetts were used by starlings compared to five of nine boxes with control lids. However, on seven eastern Massachusetts areas, only three of 17 light lid boxes were used by starlings versus 12 out of 13 control lid boxes. The reason for this difference may be reflected in a difference in starling population pressures between the two regions and requires further investigation.

Since the light lids were two and a half times longer than they were wide, we checked to determine if the direction the long axis ran in relation to the sun affected usage. Boxes were divided into two groups--those with skylights whose long axis ran basically north-south, and those where the long axis ran primarily east-west. Of nine starling nests where measurements were taken, four were in boxes with skylights running north-south and five in boxes where the skylights ran east-west. Of 11 boxes with no usage, four ran north-south, three east-west and four were borderline cases.

Table 2-1. Wood duck usage of nest boxes in 1975 and 1976.

Band Number	Band Used in 1975	Type of Lid	Box Used in 1976	Type of Lid	Remarks
Norfolk Prison					
775-36157	1	Control	1	Light	Second hen to nest in box in 1976.
735-57953	6	Control	6	Light	
685-61427	10	2x4-1/2" light	10	Control	
735-57934	12	2x3" light	1	Light	Box 12 had a starling nest.
735-57682	5	Control	13	Control	Box 5 was down.
695-40790	2 in 1974; no record in 1975.	Control	7	Light	Box 2 was down.
735-57938	6 at Bristol Blake	Control	12	Control	Box 6 was used by another duck.
Bristol Blake					
735-57917	13	Control*	13	Control	
685-94102	20	Control	25	Control	Box 20 was down.
735-57937	4	Control	7	Light	Box 4 had light lid; not used.
775-36130	10	Control	26	Control	Box 10 had light lid; not used.
775-36136	3	Control	6	Control	Box 3 with nest but abandoned.
Estabrook Pond					
735-57947	3	Control*	3	Control	
775-36124	10	Control	X-37	Control	Reason for change unknown.
685-93972	11	Control	11	Light	

* Only control lid available.

Wood Duck Use of Light Lid Boxes. Estabrook Pond, Concord; Norfolk Correctional Institution Pond and Bristol Blake State Reservation, Norfolk, Murray's Lane Pond, Harvard and Leonard Pond, Agawam, were used for this segment of the study. Boxes were divided into two categories--those used last year by wood ducks and those that were not. Every other box in each category received a light lid. Wood ducks initiated nests in 17 of 28 light lid boxes (61 percent) and in 21 of 30 control lid boxes (70 percent). This is not a significant difference (P 0.10). Thirteen (77 percent) of the nests initiated in light lid boxes were successfully incubated to term as were 16 (76 percent) of the nests in control lid boxes.

Since wood ducks frequently return to the same box to nest in subsequent years, we checked to see what ducks used what boxes in 1975 and 1976. The results are presented in Table 2-1. Of the 14 hens with 1975 breeding records, six returned to the boxes they used that year, three in spite of the presence of light lids in 1976 versus control lids last year. In some instances, boxes used in 1975 were not available in 1976. In only one instance did a hen possibly switch boxes because of a light lid (Hen 775-36130), but since another hen (775-36124) switched boxes when both had control lids, the presence of the light lid cannot be confirmed as the sole reason for the switch.

Six of the 16 light lid boxes were used by previously banded (hence adult) hens. The other nests involved unbanded birds and therefore were probably hens nesting for the first time.

* * * * * * *

Job IV-3 Cost Analysis and Prototypes Development of Plastic Wood Duck Nesting Structures

Job Objectives: To investigate the feasibility of utilizing plastic nesting structures to increase wood duck nest sites.

Summary: This job was inactive.

Completion Target Date: December 1978.

Status of Progress: Two years behind.

Significant Deviations: No work due to need for analyzing results of Job IV-2.

Recommendations: Postpone design work until data from Job IV-2 can be analyzed.

* * * * * * *

Job IV-4 Establishment of Wood Duck Populations By release of Hand-Reared Birds and by Clutch Supplementation

Job Objectives: To establish populations of wood ducks in the Quabbin Reservoir and to restore populations in other areas.

Summary: No hand-reared wood ducks were released in 1976. Two hens released in 1975 nested on Quabbin beaver ponds along with one unbanded bird. No hand-reared wood ducks were recorded in nest boxes at Turkey Hill Brook this year, but a 1975 released hen captured in late summer night-lighting operations. She appeared to be in company of a brood.

Completion Target Date: December 1977.

Status of Progress: Two years behind.

Deviations in Progress: Poor success in game farm production in both 1975 and 1976 prevented release of suitable numbers of adult wood ducks this spring or immatures this summer.

Recommendations: Attempts should be made to enlist cooperators to hand rear ducklings during the critical first four weeks after hatching. If such cooperators cannot be located by spring, the existing breeding stock should be released on Quabbin beaver ponds and other selected areas.

Cost: $900 (18-1/4 man days plus mileage and feed costs)

Remarks: No wood ducks were released in 1976. Two hand-reared birds from the 1975 release nested on Quabbin beaver ponds. One bird nested on Pond 4 in the same box used by a successful but unhandled hen in 1975. At that time, we assumed the duck was a hand-reared bird and this year's datum tends to confirm that assumption. A second unmarked wood duck that nested on Pond 4 this year may have been one of her 1975 progeny since it is the first unbanded wood duck that has nested in a Quabbin box in five years.

The second hand-reared bird nested on Pond 2. She successfully incubated a clutch of 16 wood duck and four hooded merganser eggs. This hen was not recorded as nesting in 1975. To date, four out of 12 hens released have been recorded as nesting. A male from the 1975 release was reported shot 22 October 1975 in Orange, Massachusetts.

None of the five hens released at Turkey Hill Brook, Paxton, in 1975 were recorded as nesting in boxes in 1976 but two new hens nested there and one of the 1975 released birds with no previous nesting record was caught during late summer night-lighting operations. She appeared to be accompanied by a brood. To date, two of five hens released at the Paxton site have been recorded.

Table 4-1. Wood Duck* Nesting Results for Massachusetts Study Areas, 1976.

Area	Number of Boxes	Number Nest Starts	Number of Successful Nests	Number of Ducklings Produced
Great Meadows National Wildlife Refuge	31	12	9	106*
Greenough's Estate	26	8	8	101*
Estabrook Pond	16	8	6	83
Buttrick's Estate	15	7	6	62*
Ayer Game Farm Pond	6	1(1)	1(1)	12*(13)
Breeding Pond	22	27(1)	20(1)	241 (12)
Chaffins Pond	7	0	0	0
Fisk Mill Pond	16	7(1)	6(0)	68 (0)
Nipmuc Pond	11	2(1)	2(1)	17 (8)
Long and Muddy Ponds	21	7(1)	6(0)	68
Spruce Pond	9	0	0	0
Turkey Hill Brook	11	3	3	35
Westboro Management Area	11	1	1	7
Bristol Blake Complex	31	24	18	238
Totals	233	107(5)	86(3)	1038(33)

* Numbers in parentheses ( ) refer to hooded merganser data.
Forty-six percent (46%) of the boxes were used.
Eighty percent (80%) of the nests initiated were successful.
Number of ducklings produced per successful nest was 12.1.

Production Data. Production data was recorded for 14 central Massachusetts study areas incidental to field work involved in Jobs 1, 2 and 4. The data are presented in Table 4-1. There were 107 wood duck nest starts of which 86 were successful, producing 1038 ducklings. These figures are practically the same as for 1975 (108, 88 and 1,022). These figures are down from a 1974 high but still over 80 percent higher than in 1971. Three of five hooded merganser nests were successful in producing 33 ducklings.

MASSACHUSETTS DIVISION OF FISHERIES AND WILDLIFE
Bureau of Wildlife Research and Management

Approved: _____
Richard Cronin, Superintendent

Prepared by: _____
H W Heusmann
Waterfowl Biologist

Date _____

PERFORMANCE REPORT

State: Massachusetts Project No. W-42-R-10

Project Title: Massachusetts Waterfowl Research Program

Project Type: Research

Period Covered: 15 January 1976 to 14 January 1977

Work Plan V: Gosling Transplant Study

Plan Objectives: To establish breeding populations of geese on suitable habitats in the state by gosling transplants and conduct breeding pair surveys in the vicinity of gosling release sites.

Job V-1: Gosling Transplant Study

Objectives: To transplant goslings from locations where populations are large and expanding and release them at suitable goose-producing sites where there is a possibility of developing a huntable population.

Summary: A total of 20 goslings were released at Russell Reservoir in Russell along with two adult geese. All the goslings were color leg-banded and neck-collared.

Completion Date: 31 October 1979.

Progress Status: On schedule.

Deviations: None

Recommendations: No changes.

Cost: $410 (nine man days plus mileage)

Remarks: The pretrapping Framingham-Southboro goose census indicated that only 110 geese (including goslings) were present during June of 1976. This is down from 151 geese in 1975, 162 in 1974 and 191 in 1973, a six-year high. The reduction was primarily due to the scarcity of goslings in the area. Only 26 young comprising eight broods were evident. A single drive at Reservoir No. 1 in Framingham on 1 July yielded 12 goslings (four males, 8 females) and two adults. A drive was made at the Bristol-Blake State Reservation, Norfolk, the same day. Eight goslings (five males, three females) were captured and transplanted to Russell Reservoir, Russell, along with

Publication approved by Alfred C. Holland, State Purchasing Agent #5146

the Framingham birds. All goslings were banded with orange plastic bands as well as standard Federal leg bands, and further marked with orange plastic numbered collars.

* * * * * * * * * * * * * *

Job V-2 Nesting Studies of Transplanted Geese

Objectives: To determine nesting success for transplanted goslings.

Summary: Evidence of goose nesting in 1976 on or near areas where transplanted geese were released in previous years was noted on eight sites of 15 checked.

Completion Date: 31 October 1979.

Progress Status: On schedule.

Deviations: None

Recommendations: No change.

Cost: $550 (nine man days plus mileage)

Remarks: Limited nesting checks for transplanted Canada geese were made by biologists on Quabbin Reservoir in 1976. The results are presented in Table 1. In western Massachusetts geese appear to be firmly established on the Watson and Lily Pond area in Otis. Geese were originally released there in 1968 and have nested each year since 1971. The geese accept handouts from Watson Pond residents. Geese also continue to nest at Thousand Acre Swamp, New Marlboro, where geese were released in 1970 and 1971. The geese at Littleville Dam provide the first evidence of nesting on that area where geese were released in 1973 and 1974.

In central Massachusetts, geese were released in 1968 and 1969 and again in 1975. Coverage of this extensive area is difficult but one to three pairs appear to have nested on the area every year since 1971. The birds at Leighton Road pond were probably from a Quabbin release, but the Athol birds are probably progeny of the 1967 and 1971 South Athol Pond releases. Cusky's Pond in New Braintree was never checked before but the color-marked female with seven young is undoubtedly from Adams Pond, Oakham, where geese were released in 1967, 1968, 1969 and 1973. The other geese on that pond may be young hatched in previous years. I also believe the pair nesting at Mud Pond are progeny of the Adams Pond birds.

Table 1. Evidence of Canada Goose Nesting on or Near Massachusetts Transplant Sites During 1976

Area	Remarks
Watson Pond, Otis	Reported broods of seven and five plus one brood on Lily Pond. Another cooperator confirmed two broods of five. Heard of but did not personally see the third brood. Cooperator also reported five broods totaling 28 young in 1975.
Thousand Acre Swamp, New Marlboro	No geese present but one successful nest found by biologists.
Littleville Dam, Littleville	Cooperator reports one pair geese with three young; one pair with no young.
Quabbin Reservoir, New Salem	One banded goose with four young observed by biologists, as well as six neck-collared geese from 1975 release and a flock of 16 unmarked geese.
Leighton Road, Petersham	Cooperator reports no young this year but a pair of geese with six young each of the last three years. Six to eight neck-collared geese were in the area the fall of 1975.
Lake Ellis	Unbanded pair with seven young.
South Athol Pond, Athol	Unmarked pair with five young.
Cusky's Pond, New Braintree	Color leg-banded female with seven young. Second pair with three young and six single geese.
Mud Pond, Oakham	Unmarked nesting female.

MASSACHUSETTS DIVISION OF FISHERIES AND WILDLIFE
Bureau of Wildlife Research and Management

Approved: _____
Richard Cronin, Superintendent

Prepared by _____
H W Heusmann, Waterfowl Biologist

Date _____

PERFORMANCE REPORT

State: Massachusetts Project No. W-42-R-10

Project Title: Massachusetts Waterfowl Research Program

Project Type: Research

Period Covered: 15 January 1976 to 14 January 1977

Work Plan VI: Park Waterfowl Project

Plan Objectives: To determine the size and species composition of park waterfowl populations, their locations, movements, biology and population dynamics; and to determine the value of park waterfowl populations in economic and recreational terms.

Job VI-1: Population Biology of Park Waterfowl Populations

Job Objectives: To determine the size and species composition of park waterfowl populations, their locations, movements, biology and population dynamics.

Summary: No activities were conducted directly under this job. Winter and preseason banding of park waterfowl was conducted under Job II-1. Records of band recoveries were kept.

Completion Date: 31 October 1979.

Progress Status: On schedule.

Deviations: None

Recommendations: Continue to record recovery data of park-banded waterfowl and plan future inventories to monitor statewide population changes.

Cost: $30 (1/2 man day) excluding banding activities.

Remarks: Banding of park waterfowl is carried out under Job No. II-1, Coastal and Inland Waterfowl Banding. During the winter of 1976, 769 mallards, 45 black ducks, 89 mallard x black hybrids, 5 wild x domestic crosses and 33 American coot were banded. The preseason trapping program resulted in the banding of 159 mallards, 7 mallard x domestics, 2 mallard x blacks and 1 black duck. One hundred thirty-eight (138) previously-banded ducks were recaptured.

Publication approved by Alfred C. Holland, State Purchasing Agent #5146

Job VI-2 Recreational Values of Park Waterfowl Populations

Job Objectives: To determine the value of park waterfowl populations in economic and recreational terms.

Summary: Inactive

Target Date: 31 December 1979.

Progress Status: Two years behind schedule.

Cost: No charges incurred.

MASSACHUSETTS DIVISION OF FISHERIES AND WILDLIFE
Bureau of Wildlife Research and Management

Approved: _____
Richard Cronin, Superintendent

Prepared by _____
H W Heusmann, Waterfowl Biologist

Date _____

PERFORMANCE REPORT

State: Massachusetts Project Number: W-42-R-10

Project Title: Massachusetts Waterfowl Research Program

Project Type: Research

Period Covered: 15 January 1976 to 14 January 1977

Work Plan VII: Black Duck Imprinting Study

Plan Objectives: To develop a population of black ducks imprinted to nesting in elevated nesting cylinders and to measure the degree of establishment of imprinted birds released during the breeding season on selected areas where nesting structures have been erected.

Job VII-1: Black Duck Imprinting Study

Job Objectives: To develop a population of black ducks imprinted to nesting in elevated nesting cylinders and to measure the degree of establishment of imprinted birds released during the breeding season on selected areas where nesting structures have been erected.

Summary: Seven black ducks, 3 mallards and 1 mallard x black hybrid established nests in cylinders on three release areas in 1976. All but two black duck nests were successful. Two mallards and 1 black duck were previously unbanded birds. A total of 92 ducklings were produced.

Completion Date: December 1979

Progress: On schedule.

Recommendations: Final nesting checks should be made the spring and summer of 1977 to determine if any further usage of cylinders by wild-reared birds has occurred. A final report in the form of a technical publication should be prepared.

Costs: $950 (14 man days plus mileage, feed and materials).

Remarks: No release of black ducks was made in 1976. The breeding birds held over winter were given to the Pennsylvania Game Commission for experimental studies on determining the feasibility of mass production of black ducks.

Publication approved by Alfred C. Holland, State Purchasing Agent #5146

Table 1. Black duck nest cylinder usage on study area release sites, 1975.

Area	Town	Site	Box Number	No. of Eggs	No. Hatched
Ipswich River	Topsfield	Pintail Pond	G	6	0[1]
Audubon Sanctuary			H[2]	10	10
		Bunker Meadow	C	10	10
Bristol Blake	Norfolk		D[3]	11	11
State Reservation			E	10	10
			I	9	9
			J[3]	11	11
			B[3]	11	11
Quabbin Reservoir		Pond 1	X-1	10	10
Beaver Ponds		Pond 3	X-2	10	10
			X-4	6	0[4]
	Totals			104	92
	Black Ducks Only			61	49

[1] Nest destroyed by predator
[2] Mallard x black hybrid
[3] Mallard
[4] Nest abandoned

Nesting checks of cylinders were conducted on all areas where black ducks were released in previous years. The results are presented in Table 1. No birds nested at Great Cedar Swamp, Hanson; Ayer State Game Farm, Ayer; or Swift River Wildlife Management Area, Belchertown. There were three successful nests at each of the latter two sites in 1975, the first year of release.

The first unbanded black duck of this study nested in a cylinder at the Topsfield release site. This same cylinder had a successful late nest in 1975 which was undiscovered until 1976 winter checks and not reported in Study Segment 9. One additional black duck nest was destroyed by a raccoon. The mallard-plumaged hybrid that nested at the sanctuary last year returned to nest successfully this year.

There were two black duck nests at Bristol Blake, both successful. One bird was released in 1973, caught in a bait trap in 1974, but not recorded in a cylinder until 1975. The second hen was released last year but was not found nesting. In addition to the black ducks, a mallard that nested in a cylinder in 1975 returned in 1976. Two new mallards also nested in cylinders. All nests were successful.

Three black ducks started nests on Quabbin beaver ponds. Two were successful. Both birds were 1975 releases, one a spring release with no nesting record and the other a July release.

All successful nests in cylinders by both blacks and mallards had a 100 percent hatching rate. Forty-nine black ducklings and 43 mallard-type ducklings were hatched off.

Acknowledgment: I would like to thank James MacDougal of the Ipswich River Audubon Sanctuary for his assistance on this project.

MASSACHUSETTS DIVISION OF FISHERIES AND WILDLIFE
Bureau of Wildlife Research and Management

Approved: _____
Richard Cronin, Superintendent

Prepared by _____
H W Heusmann, Waterfowl Biologist

Date _____

PERFORMANCE REPORT

STATE MASSACHUSETTS Project Number: W-42-R-10

Project Title Massachusetts Waterfowl Research Program

Project Type: Survey

Period Covered: 15 January 1976 to 14 January 1977

Work Plan I Coastal and Inland Wetlands Survey

Plan Objectives: To train field personnel in the identification of valuable wetland habitats based on a habitat rating system and to develop a priority listing of desirable wetland acquisitions statewide.

Job VII-1 Coastal and Inland Wetlands Survey

Job Objectives: To train field personnel in the identification of valuable wetlands based on a habitat rating system.

Summary: Job inactive.

Completion Date: December 1977

Costs: None

* * * * * * * *

Job VII-2 Waterfowl Habitat Reconnaissance and Evaluation

Job Objectives: To identify wetlands in Massachusetts and their value to wildlife, especially waterfowl.

Summary: Chromatic enhancement of wetland cover types on black and white topographic sheets was used in the first stage of identifying potential waterfowl habitat.

Completion Date: December 1979.

Status of Progress: On schedule.

Recommendations: Wetland complexes should be identified and assigned a coded number adaptable to computer programming. A file on wetland complexes should be starting utilizing existing Division records as well as available records of other public and private agencies.

Costs: $1,460 (37 man days plus equipment)

Publication approved by Alfred C. Holland, State Purchasing Agent #5146

Remarks: A collection of black and white topographic sheets for the entire state of Massachusetts was provided by the University of Massachusetts' Department of Forestry and Wildlife. Wetlands previously indicated by color coding on the University's master sheets were copied by Division personnel onto the unmarked topo sheets. In addition, wooded swamps as indicated on U.S. Geological Survey sheets were marked on the blank sheets. Such areas were indicated as upland hardwood areas on the original cover type maps.

Initial contacts were made with the Federal Division of River Basins and Soil Conservation Service as well as the Massachusetts Department of Natural Resources to determine what wetland surveys they had conducted. Results will be followed up on in 1977.

MASSACHUSETTS DIVISION OF FISHERIES AND WILDLIFE
Bureau of Wildlife Research and Management

Approved: _____
Richard Cronin, Superintendent

Prepared by: _____
H W Heusmann
Waterfowl Biologist

Date _____

PERFORMANCE REPORT

STATE MASSACHUSETTS Project No. W-42-R-11

Project Title Massachusetts Waterfowl Research Program

Project Type Survey

Period Covered: 15 January 1977 to 14 January 1978

Work Plan I Coastal and Inland Wetlands Survey

Plan Objectives: To train field personnel in the identification of valuable wetland habitats based on a habitat rating system and to develop a priority listing of desirable wetland acquisitions statewide.

Job I-1 Coastal and Inland Wetlands Survey

Job Objectives: To train field personnel in the identification of valuable wetlands based on a habitat rating system.

Summary: Job inactive.

Completion Date: December 1979.

Costs: None

* * * * * * * * *

Job I-2 Waterfowl Habitat Reconnaissance and Evaluation

Job Objectives: To identify wetlands in Massachusetts and their value to wildlife, especially waterfowl.

Summary: Chromatic enhancement of wetland cover types on black and white topographic sheets was used in the first stage of identifying potential waterfowl habitat.

Completion Date: December 1979.

Status of Progress: On schedule.

Recommendations: Wetland complexes should be identified and assigned a coded number adaptable to computer programming. A file on wetland complexes should be started utilizing existing Division records as well as available records of other public and private agencies.

Costs: $1,350 (27-1/4 man days).

Publication approved by Alfred C. Holland, State Purchasing Agent #5146

Remarks: Chromatic enhancement of black and white topographic sheets was completed to facilitate identification of all wetland areas in the Commonwealth. Wetlands were divided into complexes and assigned numbers. Numbers were renewed with each topo sheet and each town so that each wetland complex was assigned an eight-digit number. The first three digits identified the topographic sheet, the second three digits, the town and the last two digits the wetland complex. A three-by-five inch index card was made out for each wetland complex and common names listed when possible. Further information about the wetlands will be added to the cards. Eventually, the entire filing system will be computerized to facilitate information retrieval.

MASSACHUSETTS DIVISION OF FISHERIES AND WILDLIFE
Bureau of Wildlife Research and Management

Approved: _____
Richard Cronin, Superintendent

Prepared by _____
H W Heusmann, Waterfowl Biologist

Date _____

PERFORMANCE REPORT

STATE Massachusetts Project No. W-42-R-10

Project Title: Massachusetts Waterfowl Research Program

Project Type: Research and Survey

Period Covered: 15 January 1976 to 14 January 1977

Work Plan No. VIII Waterfowl Inventory Flights

Plan Objectives: To inventory waterfowl populations throughout the fall and winter months and in conjunction with special or experimental waterfowl seasons.

Job VIII-1 Waterfowl Inventory Flights

Job Objectives: To inventory waterfowl populations throughout the fall and winter months and in conjunction with special or experimental waterfowl seasons.

Summary: A total of 116,166 waterfowl was counted during the January 1977 winter inventory, down 4 percent from 1976 and up 7 percent over the previous 10-year average. Black duck numbers (19,690) were up 10.6 percent over 1976, but down 4.7 percent from the 10-year average. Scaup, mallards, sea ducks and Canada geese were down from last year while goldeneye, bufflehead, canvasback and merganser numbers were up.

Target Date: December 1979

Status of Progress: On schedule.

Significant Deviations: None

Recommendations: Continue inventories as requested by the U.S. Fish and Wildlife Service and Atlantic Waterfowl Council.

Cost: $1730 (19-1/4 man days plus plane rental and pilot fees)

Remarks: Procedures. Two Cessna 172 aircraft were used to inventory waterfowl along coastal Massachusetts including Cape Cod and the islands. Each aircraft was manned by a commercial pilot, a recorder and two observers. Data were tabulated by species and zones. Weather conditions, flight problems and visibility factors were recorded for each flight. The winter inventory data was submitted on standard forms to the Fish and Wildlife Service. Flights were made on 16 November 1976 and 5-6 January 1977.

Publication approved by Alfred C. Holland, State Purchasing Agent #5146

Table I. Winter Inventory, Coastal Massachusetts and Off-Shore Islands, January 1977

	Mallard	Black Duck	Scaup	Goldeneye	Bufflehead	Old Squaw	Scoter	Eider	Merganser	Canada Goose	Brant	Misc.	Total
Salisbury to Wingaersheek Beach	50	1,805		1,240					85	320			3,500
Cape Ann to Gloucester Harbor	10	1,705		718	33			80	232	51			2,829
Magnolia to Winthrop Standpipe	128	498	277	330	50		20	7,115	160	107			8,685
Winthrop Standpipe to Cohasset Beach	70	1,505	280	634	37			2,225	65				4,816
Cohasset Beach Tower to Rocky Point	10	2,010		141	15		5	16,750	40	35	636		19,642
Rocky Point to Cape Cod Canal		15		50			30	350	12				457
Cape Cod to Nobscusset Point	10	372		54	2	12	8	1,205	231	354	62		2,310
Nobscusset Point to Great Island	1	718		362	13			1,735	100	595			3,524
Great Island to Race Point	31	427		1,092	25		110	302	797		815		3,599
Nauset Light to Monomoy Point	74	4,259	4	639	938	483	269	1,454	354	971	835	95	10,375

(Continued)

Table I. (Continued)

Area	Mallard	Black Duck	Scaup	Goldeneye	Bufflehead	Old Squaw	Scoter	Eider	Merganser	Canada Goose	Brant	Miscellaneous	Total
Monomoy through Elizabeth Islands	276	1,122	1,536	2,658	1,705	114	237	307	843	801		1,964	11,563
Buzzards Bay	165	2,437	7,370	1,483	669		34	440	182	3,688		298	16,766
Mt. Hope Bay		577	735	15						10			1,337
Taunton River	35	65		5	10					75		40	230
Nantucket	90	630	1,820	1,340	350	65	515	7,595	225	375		353	13,358
Martha's Vineyard	59	1,545	1,065	2,272	1,880	24	2,890	790	1,545	798		307	13,175
Totals	1,009	19,690	13,087	13,033	5,727	698	4,118	40,348	4,871	8,180	2,348	3,057*	116,166

* Of which 2,554 were canvasbacks and 389 mute swans.

Table 2. Massachusetts winter inventory waterfowl composition breakdown and percent change from 1976 and 10-year average.

Group	1976	1977	Percent Change from 1976	Percent Change from 10-year Average
Black Duck	17,800	19,690	+ 10.6	- 4.7
Mallard	1,237	1,009	- 18.4	+ 32.3
Merganser	3,212	4,871	+ 51.7	+ 267.9
Scaup	14,753	13,087	- 11.3	- 5.9
Goldeneye	12,795	13,033	+ 1.9	+ 72.8
Bufflehead	4,771	5,727	+ 20.0	+ 144.0
Canvasback	1,213	2,554	+ 110.5	+ 405.1
Sea Ducks	49,847	45,164	- 9.4	- 19.9
Canada Goose	13,577	8,180	- 39.7	- 19.5
All Waterfowl	121,016	116,172	- 4.0	+ 7.0

Findings. The month of December was unseasonably cold with two major storms during the two weeks preceding the flights. All marshes, tidal creeks and freshwater areas along the coast were 98 percent frozen over. Many major rivers were extensively ice covered and protected bays and harbors were ice locked. Ice conditions were especially extensive along the North Shore and as a result waterfowl populations were down in that area. Populations were up or near normal along the southern edge of the Cape, the Buzzards Bay area and Nantucket and Martha's Vineyard.

A total of 116,166 waterfowl was counted (Table 1). This was a 4 percent decrease from 1976 but 7 percent higher than the 10-year average (Table 2). The total duck count was only down 1 percent from 1976 but the Canada goose cound of 8,180 was down 40 percent. Black ducks were up 10.6 percent from 1976 but down 4.7 percent from the 10-year average. Mallards were down 18 percent from last year, scaup down 11 percent and sea ducks down 9 percent. Mergansers were up 52 percent over 1976, the highest count ever and the same was true for buffleheads (up 20%), goldeneyes (up 2%) and canvasbacks (up 110%).

The annual goose flight was flown on 16 November 1976. A total of 4,289 Canada geese, 3 snow geese, 3,943 brant and 444 swans along the coast was counted. Another 773 geese were observed on inland areas in eastern Massachusetts.

MASSACHUSETTS DIVISION OF FISHERIES AND WILDLIFE
Bureau of Wildlife Research and Management

Approved: _____
Richard Cronin, Superintendent

Prepared by _____
H W Heusmann
Waterfowl Biologist

Date _____

PERFORMANCE REPORT

State: Massachusetts Project No. W-42-R-11

Project Title: Massachusetts Waterfowl Research Program

Project Type: Research

Period Covered: 15 January 1977 to 14 January 1978

Work Plan V: Gosling Transplant Study

Objectives: To establish breeding populations of geese on suitable habitats in the state by gosling transplants and conduct breeding pair surveys in the vicinity of gosling release sites.

Job 1: Gosling Transplant Study

Job Objective: To transplant goslings from locations where populations are large and expanding and release them at suitable goose-producing sites where there is a possibility of developing a huntable population.

Summary: No goslings were transplanted during 1977.

Completion Date: 31 October 1979.

Progress: On schedule.

Deviations: None

Recommendations: No changes.

Cost: $55 (1-1/4 man days plus mileage)

Remarks: The pretrapping Framingham-Southboro goose census indicate that only 90 geese (including nine goslings) were present during June of 1977. This is down from 110 last year, 151 in 1975, 162 in 1974, and 191 in 1973, a six-year high. This was the first year that no goslings were removed from this area since the project's inception in 1967. The reduction may have been due in part to a 10 May snowstorm which left 150mm of wet snow. At the Bristol-Blake State Reservation, seven to nine pairs of geese were observed nesting. After the storm, most of these birds abandoned their clutches. As a result, only a single gosling was raised on the area.

Publication approved by Alfred C. Holland, State Purchasing Agent, #5146

Table 1. Reports of Canada Goose Nesting on or Near Massachusetts Transplant Sites During 1976.

Area	Remarks
Watson Pond, Otis	Cooperator reports 10 adults plus four goslings on Watson Pond, while a second cooperator reported three broods totaling 10 young on a nearby pond. Investigation confirmed extensive fecal sign.
Gibbs Pond, Otis	Cooperator reports pair nested successfully on pond last year. Possible pair present in 1977.
Thousand Acre Swamp, New Marlboro	No geese seen but fecal sign recorded.
Russell Reservoir, Russell	No sign of geese, but a secondhand report of one pair nesting up the brook.
Cusky's Pond, New Braintree	Pair with seven young (unbanded).
Mud Pond, Oakham	One pair with four young.
Leighton Pond, Petersham	Five adults, two with aluminum bands.
Lake Ellis, Athol	Cooperator reports four geese this year; last year seven goslings; one adult with orange band.
Fernald School, Templeton	One crippled goose.
Adams Pond, Oakham	No sign.
South Athol Pond, South Athol	No sign.
Wade Pond, Athol	No sign.
Upper Lower Spectacle Pond, Athol	No sign.
Littleville Reservoir, Littleville	No sign.

Job V-2 Nesting Studies of Transplanted Geese

Objectives: To determine nesting success for transplanted goslings.

Summary: Evidence of goose nesting in 1977 on or near areas where transplanted geese were released in previous years was noted on three sites of 14 checked.

Completion Date: 31 October 1979.

Progress: On schedule.

Deviations: None

Recommendations: No change.

Cost: $240 (4-1/2 man days plus mileage)

Remarks: Limited checks were made for nesting geese in 1977 and only three good reports were recorded. Watson Pond has a firmly established flock with confirmed broods reported each year since 1971. The Lake Ellis report of one orange-banded female with a brood in 1976 was the first report of confirmed transplanted nesting geese for that area. The Cusky's Pond and Mud Pond birds are probably progeny from Adams Pond releases, see Table 1.

MASSACHUSETTS DIVISION OF FISHERIES AND WILDLIFE
Bureau of Wildlife Research and Management

Approved: _____
Richard Cronin, Superintendent

Prepared by: _____
H W Heusmann
Waterfowl Biologist

Date _____

PERFORMANCE REPORT

State: Massachusetts Project No. W-42-R-11

Project Title: Massachusetts Waterfowl Research Program

Project Type: Research and Survey

Period Covered: 15 January 1977 to 14 January 1978

Work Plan II: Coastal and Inland Waterfowl Banding

Plan Objective: To meet banding quotas set by the U. S. Fish and Wildlife Service and conduct other banding operations as they relate to research projects.

Job II-1: Coastal and Inland Waterfowl Banding (Winter Segment)

Job Objective: To meet the Federal banding quota of 1,000 black ducks for the state of Massachusetts.

Summary: Severe winter conditions allowed Division biologists and cooperators to band 1,472 black ducks, 359 mallard x black hybrids, 56 mallards, 9 pintail, 8 wigeon and 1 wood duck.

Target Date: 1979.

Progress: On schedule.

Deviations: None

Recommendations: Continue banding efforts to meet Federal quotas.

Cost: $5,900 (111 man days, plus mileage and bait).

Remarks: The winter of 1976-1977 was one of the coldest on record. Much of coastal Massachusetts was ice-locked. Starvation of brant, Canada geese and black ducks was reported on Cape Cod, and the Massachusetts Division of Fisheries and Wildlife cooperated with the Massachusetts Audubon Society and the Cape Cod Natural History Museum in an emergency waterfowl winter feeding program. On bait trapping sites, black ducks piled into the traps making trapping easy and ducks responded well to cannon net sites. A total of 1,472 black ducks, 359 mallard x black hybrids, 56 mallards, 9 pintail, 8 wigeon and 1 wood duck were banded (241 foreign recoveries and returns were also recorded, see Table 1). A total of 772 ducks were banded on the coast in 1976.

Parker River National Wildlife Refuge personnel banded an additional 274 blacks, 13 hybrids and 3 mallards under their banding permit.

Publication approved by Alfred C. Holland, State Purchasing Agent #5146

Table 1. Summary of Winter Coastal Trapping During 1977.

Area	Black Duck	Mallard x Black Hybrid	Mallard	Total	Previously Banded Birds
Boston					
Lynn Harbor	44	2	6	52	30
Wollaston Beach	165	32	1	198	30
Subtotal	209	34	7	250	60
Plymouth-Duxbury					
Myles Standish Homesite	289	159	6	454	54
Buzzards Bay					
Canal Entrance	26	2	0	28	4
Peters Neck	23	2	0	25	3
Lewis Point	71	7	2	80	26
Weweantic River	54	16	0	70	14
Subtotal	174	27	2	203	47
Mid-Cape					
Indian Trails	136	8	15	165[1]	26
Outer Cape					
Briar Springs	103	23	9	142[2]	23
Town Cove	441	63	13	518[3]	22
Pocket Neck	19	7	4	34[4]	3
Gut Fort	101	38	0	139	6
Subtotal	664	131	26	833	54
All Areas Total	1,472	359	56	1,905	241

1 - Includes 6 pintails.

2 - Includes 2 pintail, 4 wigeon, 1 wood duck.

3 - Includes 1 pintail,

4 - Includes 4 wigeon,

Acknowledgments: The Division of Fisheries and Wildlife would like to extend special thanks to Mr. Taisto Ranto, town warden of Barnstable, for his continuing efforts on behalf of the black duck banding project.

MASSACHUSETTS DIVISION OF FISHERIES AND WILDLIFE
Bureau of Wildlife Research and Management

Approved: _____
Richard Cronin, Superintendent

Prepared by: _____
H W Heusmann
Waterfowl Biologist

Date _____

 PERFORMANCE REPORT

State: Massachusetts Project No.: W-42-R-11

Project Title: Massachusetts Waterfowl Research Program

Project Type: Research and Survey

Period Covered: 15 January 1977 to 14 January 1978

Work Plan II: Coastal and Inland Waterfowl Banding

Plan Objectives: To band a well distributed sample of inland and coastal waterfowl populations preseason and on the wintering grounds in accordance with quotas established by the Banding Committee of the Atlantic Waterfowl Council.

Job II-1: Coastal and Inland Waterfowl Banding (Preseason Segment)

Job Objectives: To band a well distributed sample of inland and coastal waterfowl preseason and on the wintering grounds in accordance with quotas established by the Banding Committee of the Atlantic Waterfowl Council.

Summary: A total of 975 birds were banded during the 1977 preseason banding segment. This total includes 117 hand-reared wood ducks. Wild-banded waterfowl include 274 wood ducks, 175 mallards, 125 black ducks, 8 mallard x black hybrids, 66 green-winged teal, 26 blue-winged teal, 10 hooded mergansers and 1 mallard x domestic hybrid. Also banded were 3 soras and 2 gallinules. A cooperator banded an additional 104 least, 21 semi-palmated, 14 solitary, 12 spotted and 3 pectoral sandpipers, 5 semi-palmated plovers, 7 killdeer and 2 lesser yellowlegs.

Target Date: 1979

Status of Progress: On schedule.

Significant Deviations: None

Recommendations: Continue banding efforts to meet Federal quotas.

Cost: $7,800 (154 man days plus mileage, bait and materials).

Remarks: Hand-Reared. A total of 117 hand-reared wood ducks were banded and released (90 by Cooperator Dave Risch of Foxboro). The releases were made in conjunction with Project W-42-R, IV-4.

Nest Trapping. While conducting wood duck production study project W-42-R, IV-1, 2 and 4, 41 wood ducks and 6 hooded mergansers were captured in nest boxes and banded.

Publication approved by Alfred C. Holland, State Purchasing Agent #5146

Table 1. Airboat Launchings and Species Captured, Summer of 1977

Location	Date	Mallard	Black Duck	Mallard X Black	Wood Duck	Blue-winged Teal	Green-winged Teal	Sora	Hooded Merganser	Miscellaneous	Previously Banded	Total
Lackey Pond	8/08/77	11	17		15			1				44
Broad Meadows	8/09/77	4					1					5
Turkey Brook	8/15/77	1		2	10	1					3	17
West River	8/17/77	3			1							4
French River	8/22/77											0
Charles River	8/23/77		2		13			1				16
Lackey Pond	8/24/77	9	2									11
Great Meadows	9/01/77	13	17		46		22		1		9	108
Fisherville	9/06/77	10	8		3	1		1			2	25
Ipswich River	9/07/77	22	14	1	46	12	9		2	1**	7	114
Turkey Brook	9/08/77	2			11	2					2	17
Great Meadows	9/09/77	13	12		10	8	18			1*	11	73
Great Meadows	9/16/77	13	9	1	5	2	12			1*	7	50
Ipswich River	9/19/77	4	1		18		4		1		2	30
Totals		105	82	4	178	26	66	3	4	3	43	514

* Gallinule
** Mallard x domestic

Shore Bird Mist Netting. Division Cooperator Charles McLaughlin ran a shore bird banding program for the fourth year. He mist netted shore birds on nine occasions at the Westboro Suasco impoundment between 26 July and 8 September. He banded a total of 104 least, 21 semi-palmated, 14 solitary, 12 spotted and 3 pectoral sandpipers, 5 semi-palmated plovers, 7 killdeer and 2 lesser yellowlegs.

Preseason Banding. Bait trapping was conducted at the Great Meadows National Wildlife Refuge during August and September. Low water levels on the lower impoundment impeded trapping in that area until mid-September. A total of 67 mallards, 42 black ducks, 2 mallard x black hybrids and 55 wood ducks were banded. An additional 3 mallards, 1 black and 2 mallard x black hybrids were banded at Rice City Pond in Uxbridge. A total of 471 birds were banded during airboat night lighting operations and 43 previously banded birds were also captured (Table 1). Launchings were made on 14 nights. Season success was hindered by the loss of a week of operating time in mid-September due to necessary hull repairs and by prop damage which curtailed operations on 19 September.

Acknowledgments: The Division of Fisheries and Wildlife wishes to express appreciation for the assistance and cooperation of Linda Gintoli and the staff of Great Meadows National Wildlife Refuge, James McDougall of the Ipswich River Audubon Sanctuary and Charles McLaughlin of Bellingham.

MASSACHUSETTS DIVISION OF FISHERIES AND WILDLIFE
Bureau of Wildlife Research and Management

Approved: _____
Richard Cronin, Superintendent

Prepared by: _____
H W Heusmann
Waterfowl Biologist

Date _____

PERFORMANCE REPORT

State: Massachusetts Project No. W-42-R-11

Project Title: Massachusetts Waterfowl Research Program

Project Type: Research

Period Covered: 15 January 1977 to 14 January 1978

Work Plan IV: Wood Duck Population Study

Plan Objectives: To determine the contribution of dump nesting to total wood duck production; evaluate the use of starlingproof nesting structures by wood ducks; investigate the feasibility of utilizing plastic nesting structures to increase nest sites; to use release of game farm wood ducks to establish nesting populations on the Quabbin Reservoir as well as to reintroduce wood ducks to former nesting areas.

Job IV-1: The Biology of Dump Nesting in Wood Ducks

Job Objectives: To determine the contribution of dump nesting to total wood duck production.

Summary: Five hens that established their own nests were confirmed as laying in nests that were eventually incubated by other hens. Four other hens, suspected as dump nesters, also established their own nests. Two hens were confirmed as dump nesting, but were never found incubating.

Target Date:

Status of Progress: One year behind

Deviations in Progress: A total of 11 hens have been confirmed as dump nesting since 1975. I believe a minimum sample of at least 15 hens is necessary to draw any conclusions regarding the post-dumping status of female wood ducks based upon my knowledge of wood duck ecology. There have been no further deviations in progress since last year.

Recommendations: Observations should be extended one more year to increase the sample size and carried later into the nesting season to ascertain the degree of late-season dump nesting.

Cost: $5,800 (102 man days plus materials and mileage).

Procedures: Six areas were selected for early-morning observations. Boxes were checked every three to five days and clutches recorded. When a dump nest was found, a marking guard was put on and an observer watched the box the following morning, arriving at first light.

Publication approved by Alfred C. Holland, State Purchasing Agent #5146

Results:

While three of the four boxes at Lt. Williams Pond, Harvard, were used, none of the nests were dump nests. Consequently, no morning observations were made on the area.

Two hens nested at Long Pond in Rutland. On 14 April, Box 1 had six eggs under a good mat of down and Box 8 had seven eggs buried in shavings and appeared to be a dump nest. Collars were placed on both boxes. The next day, Box 8 had nine eggs and Box 1 had not been disturbed (collar was still in place). A second collar was placed on Box 8 and Central District Game Manager, G. C. Thurlow, observed the area the morning of 16 April. He reported one hen already in Box 8 upon his arrival. She had been collared and was confirmed as laying in the box. This hen was subsequently observed incubating in Box 8 on 26 April but abandoned the nest in early May. Fecal matter in the box indicated the hen had been disturbed but the source of the disturbance was unknown. A second hen, 775-36149, also entered Box 8 on 16 April, was collared and laid, but incubated the clutch in Box 1. This hen was originally banded in Box 1 in 1974, used Box 2 in 1975 and Box 12 in 1976. However, she was confirmed as laying at least two eggs in Box 8, two in a merganser nest and two outside of any box last year before establishing the nest in Box 12. The hen laid 10 eggs in Box 1 and at least two in Box 8 this year.

A dump nest was recorded in Box 9 at Fisk Mill Pond, 12 April, when we observed that eight eggs had been added to the box in five days. A hen was also observed in Box 8. Assistant Game Biologist Dick Burrell observed the area on 13 April. Hen 775-36474 was collared and laid in Box 9 and subsequently incubated the clutch. She had first used the box in 1976. Hen 775-36440 used Box 8, laying a second egg in the box. When the two eggs were compared to the nine eggs in Box 9, it was clearly evident that Hen 775-36440 had laid three of the nine eggs found in Box 9. She apparently laid in Box 9 until Hen 775-36474 extended her daily occupancy to several hours, then switched to Box 8. Hen '440 had been banded in Box 8 in 1976. She laid eight eggs in Box 8, three in Box 9 and possibly one in Box 4.

At Bristol-Blake, Norfolk, a dump nest was recorded on 12 April when eight eggs were added to Box 5 in five days. Hen 775-36438 was in the box at dawn on 13 April. When the female left the box, I observed that two eggs had already been added that morning. This female eventually incubated a clutch of 17 eggs in the box. On 19 April, we found that five eggs had been added to nearby Box 3. Hen 775-36136 incubated a clutch of 10 eggs in this box. Of special interest is the fact that these same two hens were observed both laying in Box 5A (box and pole torn down in 1977) in 1976. Hen '136 entered the box while Hen '438 was in it. Both laid. Hen '438 incubated that clutch while Hen '136 established a nest in Box 6 three weeks later. The similarities of the eggs laid by the two hens precludes

definite conclusions, but I believe Hen '136 was responsible for laying at least three eggs in Box 5 this year before switching to Box 3.

On Greenough's Estate in Carlisle, the first dump nests were recorded 8 April. Hen 805-75525 was collared twice (9 and 10 April) in Box 1 and believed to have laid in the box each time. On 12 April, she was collared in Box 7 but did not lay. The clutch in Box 1 was abandoned after 33 eggs had been deposited. The clutch in Box 7 was abandoned after 11 eggs were laid. This hen established a nest in Box 9 in late May. We have no previous breeding records for this hen.

Hen 775-36455 was collared in Box 10 on 10 April but did not add to the clutch of 10 eggs (although three hens were collared in this box, none incubated the clutch and it was abandoned). Instead, she established a nest in Box X-30. Hen 805-75517 was kept away from Box X-30 by the mate of Hen '455, but after '455 left the box, '517 entered and laid. She was observed on the pond again on 11 April, but did not use any of the boxes. She was found in Box X-30 on 17 April and was thought to be incubating but finally nested in Box 15 on 1 May. This hen had no previous breeding record.

On 10 April, an uncollared bird laid in Box 6. No eggs were added on 11 April, but the box was used on 12 April and contained seven eggs on 15 April. I observed the area on 16 April. Hen 775-36016 entered the box, was collared and laid. A second hen attempted to enter the box but shied away from the collar. A third hen, 735-57693, that had been collared in Box 10 on 12 April but did not lay in that box, entered Box 6, was collared a second time, laid an eventually incubated clutch of 18 eggs. Hen '016 was observed to enter Box 10 on 17 April. After three hours, I checked the box and found the collar she had picked up in Box 6 was encircling her rump and legs, making it impossible for her to excape from the box. The collar was repositioned and the hen returned to Box 10. She was never seen again, but her collar was found in Box 7 along with 14 eggs abandoned in mid-incubation. I believe Hen '016 had established a nest in this box. She first nested in Box 1 in 1973, used it again in 1974 and then used Box 6 in 1975 and 1976. I suspect she would have used Box 6 again in 1977 had her activities not been disrupted by the faulty collar placement.

On 17 April, Hen 805-75520 deposited an egg in previously-unused Box 5. This hen had picked up two collars on 11 April, one from Box 10 and one from X-30. I believe she laid in Box X-30, being one of three hens that used that box on several occasions, including 11 April. When checked on 20 April, one more egg had been added to Box 5, but the egg was so different in appearance from the first so as to

suggest it was laid by a different hen. Thirteen more eggs were added by 4 May but the nest was never incubated. Hen '520 apparently initiated a nest some distance away in Box 5360 on 3 May. This hen was a new bird.

Hen 805-75506 picked up a collar on 10 April from Box 7, a dump nest, but did not lay in the box. On 17 April, I observed her entering Box 12 where she laid. The egg matched the one laid the previous day, being much longer, thinner and browner than the five normal shaped, white eggs present. This hen established a nest in an unnumbered box shortly thereafter and incubated a clutch of 13 eggs. The nest in Box 12 was used by the same hen that used it the two previous years. Hen '506 had no previous breeding history.

The final area used as a study site in 1977 was Breeding Pond, Webster. Dump nesting on this pond is strongly influenced by a high population of breeding wood ducks. In 1975, there were 26 boxes, 19 nest starts and 13 successful nests that produced 165 ducklings. In 1976, these figures were 22 boxes, 27 starts, 20 successful and 241 ducklings. This year, there were 27 boxes, 31 starts, 19 successful nests and 279 ducklings produced. A total of 173 out of 501 eggs laid were abandoned. Eighteen of the 31 starts had 16 or more eggs and thus were considered dump nests. Smaller dump nests could not always be detected.

Hen 775-36497 was observed by project assistant Bob Bellville to lay in Box 16 on 13 April. This bird eventually incubated the clutch of 21 eggs in this box. Hen 805-75515 was also collared and laid in the box on the same day. She incubated a clutch of 18 eggs in Box 4 in early May.

Her 735-57687 was observed laying in Box 17 on 27 April. A second hen also used the box that day and was collared but the hen that finally incubated the clutch of 21 eggs was uncollared. She had used Box 17 in 1976. We do not know if the incubating hen was the second bird but lost the collar, or if the second bird did not establish a nest on Breeding Pond.

One hen which escaped unbanded was collared in Box 18 on 8 April. She laid in the box which already contained 19 eggs. She was apparently incubating in the box on 20 April when she was collared again because of a record mixup. The second collaring caused her to abandon the nest. The hen was collared a third time on 26 April in Box 5391. It was not confirmed if she laid. The bird finally incubated a clutch of 20 eggs in Box 6 in mid-May.

In addition to the above hens, birds were collared in Boxes 1 and 5 and confirmed as laying but the collars were never recovered. Clutches in both these boxes were abandoned. A hen which did not lay but was collared in Box 10 was not recovered either. One hen nested in Box 11 in May and successfully hatched a brood before she could be caught for banding. She could have been one of these missing birds.

In summary, five hens that were confirmed as laying eggs in nests incubated by a different hen eventually established nests of their own. Four other hens that I thought were also dump nesters based on circumstantial evidence also established nests of their own. Two hens were confirmed as dump nesting, but were never found incubating. Four of the nine hens handled had no previous nesting history while five were birds previously banded as nesting hens.

A manuscript describing the marking technique has been accepted for publication by the Journal of Wildlife Management.

* * * * * * * * * *

Job IV-2 — Evaluation of Starlingproof Nesting Boxes

Job Objectives: To evaluate wood duck and starling usage of horizontal nesting cylinders and wooden boxes equipped with skylight lids.

Summary: Starling acceptance of 51 x 133mm skylights on wood duck boxes was much higher in 1977 than in 1976, 57 percent versus 18 percent. There were a total of eight wood duck and one hooded merganser nests in boxes equipped with 95 x 95 skylights. All but one were successful. Starlings used three of the same style boxes. On one experimental area, there were 10 starling nests started in control boxes but only one with a 100 x 100mm light lid.

Target Date: December 1979.

Status of Progress: On schedule.

Recommendations: Light lids of 100 x 100mm should continue to be tested at all sites used in 1977, replacing all of the 51 x 133mm skylight lids. New areas should be used for further checks on wood duck acceptance.

Costs: $3,150 (55.5 man days plus mileage and materials).

Remarks: Starlingproof Nesting Cylinders. The results of annual checks of wood duck nesting cylinders for the 1970 to 1975 period were published under the following citation:

Heusmann, H W, Warren W. Blandin and Richard E. Turner. 1977. Starling-deterrent nesting cylinders in wood duck management. Wildl. Soc. Bull. 5(1):14-18.

Starling Use of Light Lid Boxes. Light lids, 51 x 133mm, put out in 1976 were left on for further evaluation. Originally, ten areas were used in 1976, but only four areas were available for use in 1977 due to a variety of factors. Nine of ten (90%) boxes with solid lids were used

by starlings and four of seven (57%) light lid boxes were used. Usage last year in the same geographic area was 12 of 13 (92%) and three of 17 (18%) respectively. While the 1977 sample size is too small for valid statistical testing, the data implies that aged skylight lids are more acceptable to starlings than new lids.

Lids with 95 x 95mm opaque skylights were also tested for starling acceptance in 1977. Lids were placed on all 10 boxes at Delaney Pond in Stow. All the boxes had been used by starlings the previous year when solid lids were in place. Only two of 10 boxes were used by starlings in 1977 although one box was used twice. All three nests were thrown out when discovered. One wood duck also nested in a light lid box.

The 95 x 95mm light lids were also placed out on three other areas where starlings and wood ducks compete for nests: Norfolk Correctional Institution Pond, Norfolk; Leonard Pond, Agawam; and Ayer Game Farm Pond, Ayer. At Norfolk, the 51 x 133mm lids used in six boxes in 1976 were replaced by 95 x 95mm lids, and placed instead on two boxes that had solid lids last year plue three new boxes. Solid lids were placed on three old boxes and one new one. Wood ducks used five of six boxes with 95 x 95mm skylights and successfully incubated four clutches. They used four of the five boxes with 51 x 133mm skylights but none of the nests were incubated. They successfully used all four of the control lid boxes. Four of the five boxes used first were control boxes. Starlings removed shavings and added some nesting material to one box with a 51 x 133 skylight but never firmly established a nest.

At Leonard Pond, the 31 x 155mm covers from 1976 were replaced with 95 x 95mm covers. There were four boxes with skylights and five with control lids. Wood ducks nested in two boxes with control lids. The three control boxes not used by wood ducks were used repeatedly by starlings. A total of 10 nests were thrown out during the four checks made on this area. There was no starling usage of the light lid boxes.

The third area, Ayer Game Farm Pond, had three boxes equipped with 95 x 95mm light lids, two with 51 x 133mm skylights and one control lid. The control lid was successfully used by a wood duck as were two of the 95 x 95mm lids. The remaining 95 x 95mm box was used by a starling. The nest was thrown out. The box was then used successfully by a hooded merganser. One of the 31 x 155mm skylight boxes was used by a starling and the other was unused.

Connecticut Valley District Game Manager, Peter Pekkala, ran an experiment at the Wilbraham Game Farm to determine starling preference for boxes equipped with different type lids. Lids were of four types: 95 x 95mm skylights on normal boxes, 95 x 95mm skylights on boxes with white interiors,

Table 2-1. Usage of Light Lid and Control Boxes by Starlings at Wilbraham.

Control Lid Normal Interior		95 x 95mm Skylight Lid Normal Interior		95 x 95mm Skylight Lid White Interior		100 x 100mm Skylight Lid Normal Interior	
Box No.	Results	Box No.	Results	Box No.	Results	Box No.	Results
1	Nest/No eggs.	2	Some materials.	3		4	
5	Shavings removed; some materials.	6		7		8	
9	A few greens.	10	Some materials.	11	Some materials.	12	Start of nest.
13	2 nests/young	14	Some material.	15		16	Shavings removed.
17	1 nest/young	18		19		20	
21	2 nests/young	22		23		24	
25	2 nests/young	26	Some materials.	27	Some material.	28	Some material.
29	2 nests/young	30		31		32	

100 x 100mm skylights on normal boxes and solid control lids. Four settings were used: side by side, boxes three meters apart, six meters apart and 15 meters apart. The groupings were repeated twice. Starlings established nests in six of eight control boxes and laid clutches in five. Four control boxes also had second nests. One of the unused control boxes was emptied of shavings and some nesting material was added. The remaining control box had only a few pieces of green vegetation in it. There were no nests in any of the boxes equipped with light lids. Four of the eight 95 x 95mm normal boxes had a few pieces of nesting material brought to the box and only two of the boxes with white interiors had any nesting materials brought in. One of the boxes with a 100 x 100mm skylight had a nest started but never completed. Some shavings were removed from a second box and nesting material added to a third (Table 2-1). Starlings showed a definite preference for boxes without skylights. The assorted nesting materials found in light-lid boxes were probably brought in by males.

* * * * * * * * * *

Job IV-3 — Cost Analysis and Prototypes Development of Plastic Wood Duck Nesting Structures

Job Objectives: To investigate the feasibility of utilizing plastic nesting structures to increase wood duck nest sites.

Summary: This job was inactive.

Target Date: December 1978.

Status of Progress: Two years behind.

Deviations: No work due to need for analyzing results of Job IV-2.

Recommendations: Postpone design work until data from Job IV-2 can be analyzed.

* * * * * * * * * *

Job IV-4 — Establishment of Wood Duck Populations by Release of Hand-Reared Birds and by Clutch Supplementation

Job Objectives: To establish populations of wood ducks in the Quabbin Reservoir and to restore populations in other areas.

Summary: One 1975-released Quabbin hen nested successfully in 1977. Two other nests by wood ducks were unsuccessful. A total of 97 immature birds were released on the Quabbin Reservoir and 20 in Sharon, Massachusetts.

Target Date: December 1979

Status of Progress: Two years behind.

Deviations: A combination power failure due to a 9 May snowstorm and raccoon predation at the Ayer Game Farm limited the number of ducklings that could be released in 1977.

Recommendations: Eggs should be allowed to be incubated by game farm hens for 10 to 14 days, then hatched by a cooperator. Ducklings should be reared to four to six weeks by the project leader and then released directly to the wild.

Cost: $2,100 (38 man days plus mileage and feed).

Findings: One hen (837-18206), first released on Pond 2 on the Prescott Peninsula in 1975 and which first nested there in 1976, nested on the east side of the Quabbin this year, a move of 11 km. No 1975 hens released at Turkey Hill Brook nested this year.

Problems were encountered in rearing ducklings this year on two counts. Eggs were collected from the eight hens remaining of the 13 sent to the Sandwich Game Farm to overwinter and were given to Phil Stanton to hatch. A 9 May snowstorm caused a power failure lasting 33 hours at Stanton's and most of the ducklings hatched died due to chilling. The project leader raised 60 of 63 ducklings given him from subsequent hatches. However, when the ducklings were placed in the Ayer Game Farm pen, raccoons managed to get into the pen on several occasions and killed approximately 20 of the ducklings. Two releases of remaining birds were made. Six males and six females were released on 7 July at Fay Brook and eight males and seven females at Fever Brook on 9 August. Both release sites were within the Quabbin Reservoir boundaries.

Dave Risch, a cooperator who raises his own wood ducks but bands under the Division permit, released 20 ducks, half of which were hens, at Trough Shop Pond in Sharon. Mr. Risch also gave the Division 36 male and 32 female immature wood ducks which were released 29 September on the Prescott Peninsula in the Quabbin, bringing the total Quabbin releases to 97 birds for 1977.

The breeding stock which had been moved back to Ayer for the season was returned to the Sandwich Game Farm for the winter.

Production Data. Production data was recorded for 14 central Massachusetts study areas incidental to field work involved in Jobs 1, 2 and 4. The data are presented in Table 4-1. There were 114 wood duck nest starts of which 84 were successful in producing 1,081 ducklings. These figures are similar to 1976 (107, 86 and 1,038) and 1975 (108, 88, 1,022) data. Duckling production was substantially down on Fisk Mill, Nipmuc, Long and Muddy Ponds but up at Great Meadows, Estabrook and Breeding Pond. Four hooded merganser nests successfully produced 34 ducklings.

Table 4-1. Wood Duck* Nesting Results for Massachusetts Study Areas, 1977

Area	No. of Boxes	No. Nest Starts	No. of Successful Nests	No. of Ducklings Produced
Great Meadows N. W. R.	29	14	13	176
Greenough's Estate	23	14	9	101
Estabrook Pond	16	11	7	111
Buttrick's Estate	15	5	5	57
Ayer Game Farm Pond	10	4(2)	4(2)	39(14)
Breeding Pond	27	31	19	279
Chaffin's Pond	9	0	0	0
Fisk Mill Pond	16	3(2)	3(2)	30(20)
Nipmuc Pond	11	1	0	0
Long and Muddy Ponds	20	2	1	10
Spruce Pond	8	0	0	0
Turkey Hill Brook	11	2	2	23
Westboro Management Area	13	1	1	11
Bristol-Blake Complex	36	26	20	244
	244	114(4)	84(4)	1,081(34)

* Numbers in parentheses ( ) refer to hooded merganser data.

Forty-eight percent (48%) of the boxes were used.
Seventy-five percent (75%) of the nests initiated were successful.
Number of ducklings produced per successful nest was 12.7.

Acknowledgments: I would like to thank David Risch of Foxboro and Philip Stanton of Upton for their assistance in the propagation of wood ducks for release in 1977.

MASSACHUSETTS DIVISION OF FISHERIES AND WILDLIFE
Bureau of Wildlife Research and Management

Approved: _____
Richard Cronin, Superintendent

Prepared by _____
H W Heusmann, Waterfowl Biologist

Date _____

PERFORMANCE REPORT

State: Massachusetts Project No. W-42-R-11

Project Title: Massachusetts Waterfowl Research Program

Project Type: Research

Period Covered: 15 January 1977 to 14 January 1978

Work Plan VI: Park Waterfowl Project

Plan Objectives: To determine the size and species composition of park waterfowl populations, their locations, movements, biology and population dynamics; and to determine the value of park waterfowl populations in economic and recreational terms.

Job VI-1: Population Biology of Park Waterfowl Populations

Job Objectives: To determine the size and species composition of park waterfowl populations, their locations, movements, biology and population dynamics.

Summary: A total of 11,952 mallards, 1,690 black ducks, 109 American wigeon and 16 pintail along with a few ringnecks, wood ducks, green-winged teal and hooded and redbreasted mergansers were counted at 126 locations in 12 cities and 54 towns during the 10-19 January survey period.

Completion Date: 31 October 1979

Progress Status: On schedule.

Deviations: None

Recommendations: Continue to record recovery data of park-banded waterfowl and prepare a banding analysis of that data.

Cost: $1,055 (16-1/2 man days plus mileage)

Remarks: A park mallard winter census was last run in 1973 when 9,671 marllards and 1,888 black ducks were counted at 116 locations in 13 cities and 55 towns. In order to determine if the park waterfowl population has changed during the last five years, the census was repeated during 7-19 January 1978.

A list of potential park sites had been updated since the 1973 census; the 1978 coverage was more extensive and not directly comparable to the earlier count. From one to three crews censused areas between 10 January and 13 January and on 17 and 19 January. Weekends, holidays and bad weather prevented counts on other days during the survey

Publication approved by Alfred C. Holland, State Purchasing Agent #5146

period. Brief items requesting information from the public on park waterfowl were run in the November-December issue of MASSACHUSETTS WILDLIFE and the Massachusetts Audubon Newsletter. A news release was also picked up by an unknown number of newspapers. A park duck is defined as a bird that spends at least part of the day during at least part of the year in close association with humans and with access to artificial feed.

A total of 20 letters and two telephone calls had resulted from these requests as of 31 January 1978. Many of these duplicated areas already censused by crew personnel. Only five letters were used to augment the count of the Division staff.

Weather during the survey period was initially cold but warmed slightly by the end. Overall, however, the weather was warmer than in 1973 and more ponds were open. Thus ducks were more dispersed than in 1973 and it is likely small groups of birds were missed.

The tally for this survey included 11,952 mallards, 1,690 black ducks, 138 American wigeon and 16 pintail along with a few wood ducks, ringnecks, hooded and redbreasted mergansers and a single green-winged teal. Ducks were counted at 126 locations in 12 cities and 54 towns. Fresh water coot were also common; 152 were seen at 14 locations. Canada geese were also present at several sites, usually in sizable flocks, but accurate counts were not kept by all crew members. At least 400 geese resided in park situations.

In several instances, sites which supported waterfowl in 1973 no longer attracted ducks. Usually the reason was due to cessation of artificial feeding. One hundred mallards and 14 black ducks were counted at the Beaver Brook Reservation in Waltham along with assorted domestic ducks and geese in 1973. The domestic birds were removed the following fall and regular feeding ceased. The next winter only a couple dozen mallards used the area and when checked this year, no birds were present. In Newton, 25 mallards and 10 black ducks were seen on the Charles River behind a grocery warehouse in 1973. Workers at the warehouse informed us that when loaves of bread or other food packages broke open during handling, they threw the contents to the ducks. The site was checked this year and we discovered that the warehouse had been converted into a skating rink. Only two black ducks were seen in the area. A second site in Newton was on the river behind a bakery where 25 mallards and 20 blacks were counted during the 1973 census. The bakery manager threw several loaves of bread out the back door each morning. When we checked this time, only a single pair of mallards was present. Upon inquiry at the bakery, we discovered the back door had been boarded up four years ago and since it was not longer convenient, the manager had quit feeding.

The Franklin Park Zoo was renovating their facilities in 1973 and did not maintain an outdoor waterfowl collection. The waterfowl pool has been restored since then and we counted 320 mallards and 130 black ducks mixed in with the Zoo's captive flock.

In order to determine if the winter population had increased or decreased in the state during the last five years, 25 areas were selected for their stability. These areas were isolated from each other and included no new sites that were censused in 1978 but not in 1973. The 1973 count for this segment of the population was 5,232 mallards and 939 black ducks. The 1978 tally was 5,156 mallards and 560 black ducks, decreases of 1.5 and 40.4 percent respectively. The mallard decrease is insignificant. The black duck counts during both surveys are questionable since the biggest flocks of blacks were from coastal locations where "park" black trade back and forth between mallard flocks and "wild" wintering black ducks. Thus it is difficult to positively identify certain groups of park black ducks. This problem does not exist on isolated inland park type situations.

The wigeon seen during this study were restricted to three sites. A flock of 53 stayed at Clay Pit Pond in Belmont Only one wigeon was counted on the pond during the 1973 count but 30 or more birds have been wintering on the pond for several years where they, along with a hundred or more mallards, are fed by high school personnel and neighborhood residents. A second flock of 45 were located on a pond in Sandwich and the remaining 10 birds were in Cohasset. Pintails were seen at seven sites, wood ducks at two and ringnecks at two sites. Mergansers were observed at several sites but these were probably not true park birds but had merely decoyed into the park flocks.

Job VI-2 — Recreational Values of Park Waterfowl Populations

Job Objectives: To determine the value of park waterfowl populations in economic and recreational terms.

Summary: Job was inactive.

Target Date: 31 December 1979.

Progress Status: Three years behind schedule.

Cost: No charges incurred.

MASSACHUSETTS DIVISION OF FISHERIES AND WILDLIFE
Bureau of Wildlife Research and Management

Approved: _____
Richard Cronin, Superintendent

Prepared by _____
H W Heusmann, Waterfowl Biologist

Date _____

PERFORMANCE REPORT

State: Massachusetts Project No. W-42-R-11

Project Title: Massachusetts Waterfowl Research Program

Project Type: Research

Period Covered: 15 January 1977 to 14 January 1978

Work Plan VII: Black Duck Imprinting Study

Plan Objectives: To develop a population of black ducks imprinted to nesting in elevated nesting cylinders and to measure the degree of establishment of imprinted birds released during the breeding season on selected areas where nesting structures have been erected.

Job VII-1: Black Duck Imprinting Study

Job Objectives: To develop a population of black ducks imprinted to nesting in elevated nesting cylinders and to measure the degree of establishment of imprinted birds released during the breeding season on selected areas where nesting structures have been erected.

Summary: Three black ducks, three mallards and one mallard x black hybrid established nests in cylinders on three release areas in 1977. All ducks handled were previously banded. Five of the nests were successful and a total of 54 ducklings were produced.

Completion Date: December 1979.

Progress: On schedule.

Recommendations: A final report in the form of a technical publication should be prepared.

Costs: $500 (nine man days plus mileage).

Remarks: Only three black ducks nested in cylinders in 1977. Two blacks nested at the Ipswich River Sanctuary. Hen 1017-87674 was a wild-born female that was banded in a nest in 1976 and suspected of having used the same structure in 1975. The second hen hatched off a brood before she could be captured. A third bird was a mallard-black duck hybrid banded at Parker River National Wildlife Refuge on 11 August 1973 as a juvenile. This hen nested unsuccessfully in a cylinder on Pintail Pond in 1975 and successfully in 1976. She was found dead in a cylinder at Hassocky Swamp.

Publication approved by Alfred C. Holland, State Purchasing Agent #5146

Table 1. Black Duck Nest Cylinder Usage on Study Area Release Sites, 1977

Area	Town	Site	Box No.	No. of Eggs	Number Hatched
Ipswich River Audubon Sanctuary	Topsfield	Pintail Pond	H	Est. 11	Est. 11
Audubon Sanctuary		Bunker Meadow	A	11	11
		Hassocky Swamp	I[1]	Female dead in cylinder	
Bristol Blake State Reservation	Norfolk		B[2]	12	11
			C[2]	1	0
			D[2]	11	11
			E[2]	12	0
Quabbin Reservoir Beaver Ponds	New Salme	Pond 1	X-1	10	10
		Totals		68	54*

[1] Mallard x black hybrid

[2] Mallard

* 32 black ducklings

The third black nested in a cylinder on Pond 1 in the Quabbin. This hen was released in July 1975 and had nested successfully on Pond 1 last year.

No black ducks used cylinders at Bristol Blake, but four mallard nests were started. One nest contained only a single egg. A second nest of 12 eggs was incubated but abandoned. One hen successfully hatched 11 eggs but was not handled. The cylinder was probably used by the hen that had nested in it in 1976. The final cylinder used was by a hen that first nested in the same cylinder the year previous.

A total of 54 ducklings of which 32 were black ducks were hatched off.

During the five years that this study has run, it has become apparent that black ducks cannot be imprinted to immobile objects. The lack of recruitment of black ducks hatched in cylinders may be due to poor survival of young or to inadequate development of any structural attachment to cylinders. Mallards, a species known for its adaptibility, used cylinders readily despite a lack of "formal education". Whether they used cylinders through imitation or through their natural pioneering tendencies is unknown. A complete discussion of the project will be forthcoming in the final report.

Acknowledgment: I would like to thank James MacDougal of the Ipswich River Audubon Sanctuary for his assistance on this project.

MASSACHUSETTS DIVISION OF FISHERIES AND WILDLIFE
Bureau of Wildlife Research and Management

Approved: _____
Richard Cronin, Superintendent

Prepared by: _____
H W Heusmann, Waterfowl Biologist

Date _____

PERFORMANCE REPORT

State: Massachusetts Project No. W-42-R-11

Project Title: Massachusetts Waterfowl Research Program

Project Type: Research and Survey

Period Covered: 15 January 1977 to 14 January 1978

Work Plan VIII: Waterfowl Inventory Flights

Plan Objectives: To inventory waterfowl populations throughout the fall and winter months and in conjunction with special or experimental waterfowl seasons.

Job VIII-1: Waterfowl Inventory Flights

Job Objectives: To inventory waterfowl populations throughout the fall and winter months and in conjunction with special or experimental waterfowl seasons.

Summary: A total of 158,540 waterfowl were counted during the January 1978 winter inventory, up 36 percent from 1977 and up 62 percent over the previous ten-year average. Black duck numbers (30,711) were up 56 percent over 1977, and up 73 percent from the ten-year average. Canvasbacks and goldeneyes were down from 1977, but only goldeneyes fell below the ten-year average. All other species were up. Mergansers and mallards showed exceptionally large increases.

Target Date: December 1979

Status of Progress: On schedule.

Deviations: None

Recommendations: Continue inventories as requested by the U. S. Fish and Wildlife Service and Atlantic Waterfowl Council.

Cost: $1,810 (16 man days plus plan rental and pilot fees).

Remarks: Procedures: Two Cessna 172 aircraft were used to inventory waterfowl along coastal Massachusetts including Cape Cod and the islands. Each aircraft was manned by a commercial pilot, a recorder and two observers. Data were tabulated by species and zones. Weather conditions, flight problems and visibility factors were recorded for each flight. The winter inventory data was submitted on standard forms to the Fish and Wildlife Service. Flights were made on 16 November 1977 and 3-4 January 1978.

Publication approved by Alfred C. Holland, State Purchasing Agent #5146

Table 1. Winter Inventory, Coastal Massachusetts and Off-Shore Islands, January 1978

	Year	Mallard	Black Duck	Scaup	Goldeneye	Bufflehead	Old Squaw	Scoter	Eider	Merganser	Canada Goose	Brant	Miscellaneous	Total
Salisbury to Wingaersheek Beach	1977	50	1,805		1,240					85	320			3,500
	1978	120	1,235		530	190			30	21	300			2,426
Cape Ann to Gloucester Harbor	1977	10	1,705		718	33			80	232	51			2,829
	1978	105	11,535		205	25			295	24	8			12,197
Magnolia to Winthrop Standpipe	1977	128	498	277	330	50		20	7,115	160	107			3,685
	1978		95		135	35			6,050	92	75			6,482
Winthrop Standpipe to Cohasset Beach	1977	70	1,505	280	634	37			2,225	65				4,816
	1978		435	4,050	155	40			1,395	55	13			6,143
Cohasset Beach Tower to Rocky Point	1977	10	2,010		141	15		5	16,750	40	35	636		19,642
	1978		1,655		150	25		55	17,785	30	589	540	15	20,844
Rocky Point to Cape Cod Canal	1977		15		50			30	350	12				457
	1978		20		40			20	185	17				282
Cape Cod to Nobscusset Point	1977	10	372		54	2	12	8	1,205	231	354	62		2,310
	1978	23	2,621		80	31		23	18,591	834	722	85		23,011
Nobscusset Point to Great Island	1977	1	718		362	13			1,735	100	595			3,524
	1978		1,500			50		61	216	70	687	480		3,064
Great Island to Race Point	1977	31	427		1,092	25		110	302	797		815		3,599
	1978	95	537			5		5	460	3,740	100	525		5,467

(Continued)

Table 1. (Continued)

	Year	Mallard	Black Duck	Scaup	Goldeneye	Bufflehead	Old Squaw	Scoter	Eider	Merganser	Canada Goose	Brant	Miscellaneous	Total
Nauset Light to Monomoy Point	1977	74	4,259	4	639	938	483	269	1,454	354	971	835	95	10,375
	1978	140	6,006		685	1,090	75	290	1,755	280	2,795	1,715	90	14,921
Monomoy through Elizabeth Islands	1977	276	1,122	1,536	2,658	1,705	114	237	307	843	801		1,964	11,563
	1978	1,104	889	1,640	1,243	2,745	10	169	410	421	1,858	154	625	11,268
Buzzards Bay	1977	165	2,437	7,370	1,433	669		34	440	182	3,688		298	16,766
	1978	90	1,038	8,105	1,570	2,015			2,315	465	1,834	149	147	17,728
Mt. Hope Bay	1977		577	735	15						10			1,337
	1978	15	260	670	165	20				20				1,150
Taunton River	1977	35	65		5	10					75		40	230
	1978	30	40	1,749									275	2,095
Nantucket	1977	90	630	1,820	1,340	350	65	515	7,595	225	375		353	13,358
	1978	330	965	55	262	215	323	2,422	9,355	1,495	387	27	483	16,319
Martha's Vineyard	1977	59	1,545	1,065	2,272	1,880	24	2,390	790	1,545	798		307	13,175
	1978	90	1,380	490	1,456	607	72	1,622	1,827	5,090	1,069	160	770	15,133
Totals	1977	1,009	19,690	13,087	13,033	5,727	698	4,118	40,348	4,871	8,180	2,348	3,057*	116,166
	1978	2,142	30,711	16,759	6,676	7,093	480	4,667	60,670	12,654	10,437	3,845	2,406*	158,540

* of which 1,030 were canvasbacks and 461 mute swans.

Table 2. Massachusetts Winter Inventory Waterfowl Composition Breakdown and Percent Change from 1977 and Ten-Year Average

Group	1977	1978	Percent Change from 1977	Percent Change from Ten-Year Average
Black Duck	19,690	30,711	+ 56	+ 73
Mallard	1,009	2,142	+112	+200
Merganser	4,871	12,654	+160	+875
Scaup	13,087	16,759	+ 28	+ 32
Goldeneye	13,033	6,676	- 49	- 5
Bufflehead	5,727	7,093	+ 24	+201
Canvasback	2,554	1,030	- 60	+121
Sea Ducks	45,164	65,817	+ 46	+ 44
Canada Goose	8,180	10,437	+ 28	+ 13
All Waterfowl	116,172	158,540	+ 36	+ 62

Findings: Temperatures in December were near normal. Most tidal creeks and marshes were frozen over but protected bays and harbors were only partially iced in and exposed areas were ice free. There was some floe ice on the major rivers on the North Shore. Waterfowl counts were high with large concentrations of black ducks on both the North Shore and Cape Cod areas. The black duck count of 30,711 was the highest since 1969 and the third highest since the counts were started in 1945. The tally was 56 percent higher than last year and 73 percent above the ten-year average.

Mallard numbers (2,142) were also up, 112 percent over 1978, 200 percent over the ten-year average. The merganser count of 12,654 was 160 percent higher than last year and 875 percent over the ten-year average. Better identification of these birds has led to part of the apparent ten-year increase but the increase from 1977 to 1978 reflects a real increase in merganser numbers in Massachusetts.

Increases for other species is reflected in Table 2. The only decrease from last year was in canvasbacks and goldeneyes. Part of the goldeneye decrease-merganser increase along the mainland sections may be due to confusion between these two groups. Both show similar black and white markings in flight. Ground observations, however, have also indicated an increase in mergansers (mostly red-breasted) and a decrease in goldeneyes. Sea duck numbers were also high with the count of 65,817 being about 45 percent higher than both the 1977 and ten-year average counts. In general, the total waterfowl count of 158,540, up 36 percent from 1977 and 62 percent from the ten-year average, reflects the lingering of waterfowl in more northern areas and the relatively early dates of the inventory in 1978.

The annual goose flight was flown on 16 November 1977. A total of 2,908 Canada geese were counted, an unusually low November count. On the other hand, the 9,926 brant observed was exceptionally high.

MASSACHUSETTS DIVISION OF FISHERIES AND WILDLIFE
Bureau of Wildlife Research and Management

Approved: _____
Richard Cronin
Superintendent

Prepared by _____
H W Heusmann
Waterfowl Biologist

PERFORMANCE REPORT

State: Massachusetts Project No. W-42-R-11

Project Title: Massachusetts Waterfowl Research Program

Project Type: Research

Period Covered: 15 January 1977 to 14 January 1978

Work Plan X: Relationships of Canada Geese to Commercial Fisheries

Objectives: To determine the relationship between Canada geese and the commercial and recreational fisheries industry in Massachusetts.

Job X-1: Relationship of Canada Geese to Commercial Shellfisheries

Job Objectives: To determine the relationship between Canada geese and the commercial and recreational shellfisheries industry in Massachusetts.

Summary: Sixty-five percent (65%) of questionnaire respondents reported problems with Canada goose shellfish depredations. Field Observations could not support these claims although depredations by mallards, black ducks and a herring gull were observed.

Target Date: January 1980.

Progress: On schedule.

Recommendations: Continue field observations but increase the number of study sites and make observations during winter months.

Cost: $1,085 (14-3/4 man days plus spotting scope, meals and mileage).

Results: A questionnaire was passed out by Burke Limeburner at the 1977 Massachusetts Shellfisheries Officer's Convention. A total of 23 questionnaires were returned by town shellfisheries wardens. The following list of species indicate problem areas:

Publication approved by Alfred C. Holland, State Purchasing Agent #5146

Species	No. Wardens with Problems: Major Problems	Minor Problems	No Problems
Canada Goose	11	4	8
Black Duck	4	4	15
Mallard	4	2	17
Sea Gull	10	6	7

Canvasbacks, mergansers, brant, domestic ducks, eider, coots and swans were also indicated as problem birds. Also listed were green crabs, horseshoe crabs and cockles.

Only two wardens indicated they had no problems with anything. Eighteen of the wardens indicated that the problems with the above species were in conflict with their management programs; four indicated no interference and one indicated a seasonal problem.

Using this data, I contacted several wardens to determine the feasibility of establishing study areas in various towns. Two of the contacted wardens indicated that Canada geese were not a major problem this past year though on the questionnaire they had listed geese as a major problem.

I checked sites in Orleans, Yarmouth, Barnstable and Falmouth for suitability for observing waterfowl in seed clam areas. Most of the complaint areas centered in the Cape Cod area and the islands. Complaints from the North Shore were located on the Parker River National Wildlife Refuge and a Plymouth area complaint was withdrawn.

Netting exclosures designed to protect portions of soft-shell clam beds and allow quantification of data were set up in Barnstable, Falmouth and Orleans by town shellfisheries officers. The Falmouth experiment was vandalized. Attempts to observe the actions of geese were unsuccessful on the remaining two sites as geese did not frequent the area around the clam beds.

The Barnstable officer reported a general reduction of Canada goose numbers in that town, particularly on the South Shore. Goose numbers were down throughout the late summer and fall. November flights indicated only 2,900 geese were in the coastal areas of the state compared to populations in most years of 3500 to 5000. The January 1978 count of 10,437 was up 28 percent over 1977.

Most observation time was spent in Orleans where I made observation checks at dawn, midday or dusk on seven occasions between 10 August and 4 November. Although geese were present in the town cove area on most occasions and

were observed eating eel grass, geese did not approach clam bed areas in Orleans. Geese were observed on a soft-shell clam area once in Eastham but there was no evidence of puddling or any other sign of depredations on shellfish.

Puddling actions by mallards and black ducks was observed on soft-shell and quahog clam beds and it appeared that the ducks were ingesting clams. On one occasion, a herring gull was observed alternately puddling and diving and the bird eventually secured what appeared to be a large quahog clam which it flew off with.

There were extensive signs of puddling in the town cove area. One fisherman reported commonly finding young soft-shell clams in the stomachs of flounders and another sportsman commented that he had watched horseshoe crabs creating puddle-like depressions while feeding on soft-shelled clams.

I would like to acknowledge the assistance of Shellfisheries Officers Burke Limeburner, Ty Ranta, George Sousa, Morris Johnson, Sandra Libby and Gardner Munsey.

MASSACHUSETTS DIVISION OF FISHERIES AND WILDLIFE
Bureau of Wildlife Research and Management

Approved: _____
Richard Cronin, Superintendent

Prepared by _____
H W Heusmann, Waterfowl Biologist

Date _____

PERFORMANCE REPORT

State: Massachusetts Project No. W-42-R-12

Project Title: Massachusetts Waterfowl Research Program

Project Type: Research

Period Covered: 15 January 1978 to 14 January 1979

Work Plan V: Gosling Transplant Study

Objectives: To establish breeding populations of geese on suitable habitats in the state by gosling transplants and conduct breeding pair surveys in the vicinity of gosling release sites.

Job 1: Gosling Transplant Study

Job Objective: To transplant goslings from locations where populations are large and expanding and release them at suitable goose-producing sites where there is a possibility of developing a huntable population.

Summary: No goslings were transplanted during 1978.

Completion Date: 31 October 1979.

Progress: On schedule.

Deviations: None

Recommendations: No changes.

Cost: $570 (1-1/2 man days plus mileage)

Remarks: The 1978 June census of the Southboro-Framingham flock indicated 107 geese of which 28 were young. Sixteen goslings were seen at the Fay School, Southboro, the largest number in five years. It appears that after a five year trapping hiatus due to scarcity of goslings, the Southboro flock is again beginning to reproduce.

Publication approved by Alfred C.Holland,State Purching Agent #5146

Table 1. Reports of Canada Goose Nesting On or Near Massachusetts Transplant Sites During 1978.

Area	Remarks
Watson Pond, Otis	Observed pair of unbanded adults with three young and a second broodless pair of adults. There were 10 adults and a brood of 6 young on a nearby pond. One parent was banded 638-85251. A 1974 released bird in Chester.
White Lily Pond, Otis	Observed a pair of unbanded adults with four young.
Gibbs Pond, Otis	Observed two broods of five and two young. Cooperator reports at least 30 geese stay on the pond.
Thousand Acre Swamp, New Marlboro	No sign.
Bog & North Ponds, Savoy	No sign.
Russell Reservoir, Russell	Observed one pair with two young; female orange banded.
Tyler Property, Worthington	Observed one pair with three young.
Littleville Reservoir, Chester	No sign.
Lake Ellis, Athol	Cooperator reports one pair with three young left.
Cusky's Pond, New Braintree	No sign.
Mud Pond, Oakham	No sign.
Adams Pond, Oakham	No sign.
Leighton Pond, Petersham	No sign.
Upper-Lower Spectacle Ponds, Athol	No sign.
South Athol Pond, South Athol	No sign.

Job V-1 — Nesting Studies of Transplanted Geese

Objectives: To determine nesting success for transplanted goslings.

Summary: Evidence of goose nesting in 1978 on or near areas where transplanted geese were released in previous years was noted on seven sites of 16 checked.

Completion Date: 31 October 1979.

Progress: On schedule.

Deviations: None

Recommendations: No change.

Cost: $300 (5 man days plus mileage)

Remarks: A total of eight broods totalling 28 young were observed or reported on seven of sixteen sites during late spring checks (Table 1). Broods were observed on two ponds where they had not been reported in previous years. One parent bird with a brood of six young was determined by sight reading of the band to have been released in 1974 at Littleville Dam in Chester, about 10 Km away. This brood was seen on a pond near Watson Pond. A second color-marked bird with a brood was observed in Russell at the Russell Reservoir release site. There was an unconfirmed report of nesting geese in this vicinity last year.

A pair of geese with a brood, too far away to observe whether or not the adults were banded, were noted on a farm pond in Worthington. Since geese were transplanted to sites a few kilometers to the north and south of the area in past years, it is possible they were released birds or the progeny of released birds.

MASSACHUSETTS DIVISION OF FISHERIES & WILDLIFE
Bureau of Wildlife Research and Management

Approved: _____
Richard Cronin, Superintendent

Prepared by: _____
H W Heusmann
Waterfowl Biologist

Date _____

PERFORMANCE REPORT

State: Massachusetts Project No. W-42-R-12

Project Title: Massachusetts Waterfowl Research Program

Project Type: Research and Survey

Period Covered: 15 January 1978 to 14 January 1979

Work Plan II: Coastal and Inland Waterfowl Banding

Plan Objective: To band a well distributed sample of inland and coastal waterfowl populations preseason and on the wintering grounds in accordance with quotas established by the Banding Committee of the Atlantic Waterfowl Council.

Job II-1: Coastal and Inland Waterfowl Banding (Preseason Segment)

Job Objective: To band a well distributed sample of inland and coastal waterfowl preseason and on the wintering grounds in accordance with quotas established by the Banding Committee of the Atlantic Waterfowl Council.

Summary: A total of 1,110 birds were banded during the 1978 preseason banding segment. This total includes 111 hand-reared wood ducks. Wild-banded waterfowl include 291 wood ducks, 294 mallards, 142 black ducks, 22 mallard x black hybrids, 111 green-winged teal, 73 blue-winged teal, 2 wigeon, 1 pintail and 1 mallard x unknown hybrid. Also banded were 2 soras, 2 gallinules and 1 coot. A cooperator banded an additional 30 least, 7 semi-palmated, 1 solitary and 14 spotted sandpipers, 2 semi-palmated plovers, and 3 killdeer.

Target Date: 1979.

Progress: On schedule.

Deviations: None.

Recommendations: Continue banding efforts to meet Federal quotas.

Cost: $6,100 (97 man days plus mileage, bait and materials).

Remarks: Hand-Reared. A total of 111 hand-reared wood ducks were banded and released (52 by Cooperator Dave Risch of Foxboro). The releases were made in conjunction with Project W-42-R, IV-4.

Publication approved by Alfred C. Holland, State Purchasing Agent #5146

Table 1. Airboat Launchings and Species Captured, Summer of 1978

Location	Date	Mallard	Black	Mallard X Black	Wood Duck	Blue-Winged Teal	Green-winged Teal	Sora	Miscellaneous	Previously Banded	Total
Lackey Pond	08/04/78	37	6	2	11						56
Charles River, Bellingham	08/07/78										0
Warner Pond, Concord	08/11/78				8					2	10
Turkey Brook	08/14/78				1						1
West River	08/23/78	2									2
Lackey Pond	08/23/78	2	5		4					2	13
Turkey Brook	08/25/78	4	1		22	4	1				32
Great Meadows	09/01/78	65	18	7	36	16	14		1(1) 1(2)	13	171
Ipswich River	09/05/78	5	8		26	15	8			2	64
Fisherville	09/07/78	4	2		1	Exhaust pipe blew out					7
Great Meadows	09/08/78	37	20		14	9	10			5	95
Ipswich River	09/20/78	1		3	34	14	17			9	78
Fisherville	09/21/78	22	1		22		4		1(3)	2	52
Great Meadows	09/22/78	20	19	1	17	10	22	2	1(4)	16	108
Ipswich River	09/27/78				5		3			1	9
Fisherville	09/28/78	1			3	1					5
Great Meadows	09/29/78	37	33	2	15	3	32		1(1) 1(4) 1(5)	23	148
Totals		237	113	15	219	72	111	2	7	75	851

1 - Gallinule
2 - Pintail
3 - Mallard x Unknown
4 - Wigeon
5 - Coot

Nest Trapping. While conducting wood duck production study project W-42-R, IV-1, 2 and 4, 14 wood ducks were captured in nest boxes and banded.

Shore Bird Mist Netting. Division Cooperator Charles McLaughlin ran a shore bird banding program for the fifth year. He mist netted shore birds on four occasions at the Westboro SuAsCo site. He banded a total of 30 least, 14 spotted, 7 semi-palmated and 1 solitary sandpipers, 3 killdeer and 2 semi-aplmated plovers.

Preseason Banding. Bait trapping was conducted at the Great Meadows National Wildlife Refuge during August and September. A total of 59 wood ducks, 56 mallards, 29 black ducks and 6 mallard x black hybrids were banded during 10 nights of trapping. Bait traps were also operated at Rice City Pond, Uxbridge, this year; 13 wood ducks, 1 mallard, 1 mallard x black hybrid and 1 blue-winged teal were trapped in three nights. All but one bird were caught on the first night of trapping. Airboat night-lighting operations were conducted on 16 nights between 4 August and 28 September. A total of 776 birds were banded (Table 1). There were 75 previously-banded birds also taken.

Acknowledgments: The Division of Fisheries and Wildlife wishes to express appreciation for the assistance and cooperation of Dave Beals and the staff of Great Meadows National Wildlife Refuge and Charles McLaughlin of Bellingham.

MASSACHUSETTS DIVISION OF FISHERIES AND WILDLIFE
Bureau of Wildlife Research and Management

Approved: _____
Richard Cronin
Superintendent

Prepared by: _____
H W Heusmann
Waterfowl Biologist

Date: _____

State Massachusetts Project No. W-42-R-12

Project Title Massachusetts Waterfowl Research Program

Project Type: Research and Survey

Period Covered: 15 January 1978 to 14 January 1979

Work Plan II Coastal and Inland Waterfowl Banding

Plan Objectives: To meet banding quotas set by the U. S. Fish and Wildlife Service and conduct other banding operations as they relate to research projects.

Job II-1 Coastal and Inland Waterfowl Banding (Winter Segment)

Job Objectives: To meet the Federal banding quota of 1,000 black ducks for the state of Massachusetts.

Summary: Division personnel and cooperators banded 551 black ducks, 89 mallard x black hybrids, 39 mallards, 6 pintail, 1 wigeon and 7 green-winged teal.

Target Date: 1979

Progress: On schedule.

Deviations None

Recommendations: Continue banding efforts to meet Federal quotas.

Cost: $7,540 (142 man days, plus mileage and bait).

Remarks: The winter of 1977-1978 was moderate and typical of most winters in Massachusetts with periods of severe cold broken by warm spells. As a result, most bays and harbors remained open or were iced in for only brief periods of time, unlike last year when these same areas remained ice locked for several weeks. Black duck wintering counts were the highest since 1969 with nearly 31,000 birds counted during the winter inventory flight.

Division personnel and their cooperators banded a total of 551 black ducks, 89 mallard x black hybrids, 39 mallards, 7 green-winged teal, 6 pintail and 1 wigeon (Table 1). An additional 313 black ducks were banded by personnel of the Parker River National Wildlife Refuge.

This year, the Division began participation in a black duck reward band study; 107 reward bands were placed on black ducks.

Publication approved by Alfred C. Holland, State Purchasing Agent #5146

Table 1. Summary of Winter Coastal Trapping, 1978

Area	Black	Black x Mallard Hybrid	Mallard	Total	Previously Banded
Boston					
Lynn Harbor	40	8	2	50	14
Wollaston	22	8	0	30	4
Subtotal	62	16	2	80	18
Plymouth-Duxbury					
Standish Homesite	16	2	0	18	2
Eagles Nest	29	14	0	43	5
Hicks Point	163	26	2	191	21
Subtotal	208	42	2	252	28
Buzzards Bay					
Lewis Point	17	11	13	41	25
Weweantic River	79	7	5	91	8
Canal Entrance	38	6	0	44	13
Subtotal	134	24	18	176	46
Mid-Cape					
Indian Trail	100	4	15	132*	1
Outer Cape					
Briar Springs	33	1	2	36	1
Fort Hill	9	2	0	11	3
Pocket Neck	5	0	0	6**	1
Subtotal	47	3	2	53	5
All Areas Total	551	89	39	693	98

* 7 green-winged teal and 6 pintail
** 1 wigeon

Acknowledgments: The Division of Fisheries and Wildlife would like to extend special thanks to Mr. Taisto Ranto, town warden of Barnstable, for his continuing efforts on behalf of the black duck banding project.

MASSACHUSETTS DIVISION OF FISHERIES AND WILDLIFE
Bureau of Wildlife Research and Management

Approved: _____
Richard Cronin, Superintendent

Prepared by _____
H W Heusmann, Waterfowl Biologist

Date _____

State MASSACHUSETTS Project No. W-42-R

FINAL REPORT

Project Title: MASSACHUSETTS WATERFOWL RESEARCH PROGRAM

Study No. and Title: VII - Black Duck Imprinting Study

Plan Objectives: To develop a population of black ducks imprinted to nesting in elevated nesting cylinders and to measure the degree of establishment of imprinted birds released during the breeding season on selected areas where nesting structures have been erected.

Job VII-1 Black Duck Imprinting Study

Job Objectives: To develop a population of black ducks imprinted to nesting in elevated nesting cylinders and to measure the degree of establishment of imprinted birds released during the breeding season on selected areas where nesting structures have been erected.

Period Covered: 15 January 1971 to 30 March 1979

Abstract: Hand-reared black ducks (*Anas rubripes*) were subjected to a conditioning program designed to encourage usage of elevated nesting cylinders and then released on freshwater inland ponds in Massachusetts. A minimum of 11 percent of released females established nests in cylinders. Although an estimated 287 ducklings were hatched out in cylinders, only one non-released black duck was known to have nested in a cylinder during this study.

Publication approved by Alfred C. Holland, State Purchasing Agent #5146

The purpose of this paper is to report on attempts to develop populations of black ducks conditioned to use elevated, predator-proof nesting cylinders. McGilvrey (1971) summarized the results of studies on black duck nesting success and reported that nest success rates ranged from 38 to 67 percent. To minimize nest predation in black ducks, McGilvrey placed newly-hatched black ducklings in cylinders for 24 hours, moved them to holding pens containing elevated cylinders and then released the birds the following spring on impoundments at the Patuxent Wildlife Research Center. He found that at least 16.7 percent of the hens released on the impoundments nested in cylinders, but that ducklings brooded in cylinders had no greater propensity to nest in cylinders than had those brooded in incubators. Some wild-reared offspring nested in cylinders in later years.

Lesser et al (1974) used similar conditioning procedures and released black ducks on salt marshes in Delaware where nesting cylinders had been erected. Approximately 20 percent of the hens released nested successfully in cylinders but no offspring returned to use the structures. The authors reported that poor brood habitat on the marshes caused hens and broods to leave the area of the cylinders before ducklings were conditioned to the nesting sites.

This study was designed to determine if populations of cylinder-using black ducks could be developed on beaver (*Castor canadensis*) ponds and other small freshwater impoundments in the Northeast.

We would like to acknowledge the activities of R. H. Bellville, R. E. Turner, J. McDougall, C. Thomas, J. Prouty, P. Mahoney and J. Bicknell.

DESCRIPTION OF STUDY AREAS

Black ducks were released annually on 3 areas during 1973-75. Each release site was closed to hunting and represented a different type of Massachusetts waterfowl habitat. The Ipswich River Audubon Sanctuary in Topsfield, located 32 km north of Boston, consisted of 49.4 ha of impounded, interspersed, deep marsh, shallow marsh and shrub swamp. The predominant vegetation was buttonbush (*Cephalanthus occidentalis*) and narrow-leaved cattail (*Typha angustifolia*). A 4.5 x 9 x 1.5 m covered pen on a centrally located 2000 m^2 pond was used to hold the ducks prior to release. There were 2 nesting cylinders present on the fenced-in release pond. Five cylinders were erected on a marsh north of the pond and 5 on an impounded area to the south.

The Bristol-Blake State Reservation, located 35 km southwest of Boston, consisted of 27.6 ha of wetlands. An open-water pool was surrounded on three sides by a zone of deep marsh where pickerel weed (*Pontedera cordata*) predominated, followed by a zone of shrub swamp where the dominant plant was red maple (*Acer rubrum*). The fourth side of the pond bordered on lawn and field. A temporary 2 x 4 x 1.2 m holding pen was set up on the lawn in 1973 and 1974. Ten cylinders were erected along the edge of the deep marsh-shrub swamp zone.

The third area was located on the 35,200 ha Quabbin Reservation located 105 km west of Boston. A group of 5 active beaver ponds, 0.9 to 4.9 ha in size and ranging in age from 15 to 20 years (H. Mellin, personal communications) was selected on the Prescott Peninsula. This 5,960 ha peninsula extended southward into a 10,500 ha reservoir and was closed to the public. The central pond of the group was an impounded bog consisting of an open water area surrounded by leatherleaf (Chamaedaphne calyculata). Vegetation on the surrounding ponds consisted of flooded red maple, oaks (Quercus spp.) and white pine (Pinus strobus). Three cylinders were placed on each pond.

Single releases of black ducks were made on 3 additional areas in 1975. The areas consisted of a 3-year-old beaver pond on the Swift River Wildlife Management Area, Belchertown, just south of the Quabbin Reservation; a cranberry bog reservoir in Hanson, 37 km southeast of Boston; and the Ayer State Game Farm, 50 km northwest of Boston, where the ducks were raised. Hunting was allowed on each of these areas.

PROCEDURES

The Delaware Division of Fish and Wildlife supplied eggs from their captive flock in 1971 and 1972. These were hatched in incubators at our Sandwich Game Farm and the ducklings were used as breeders. In 1973, we received the remainder of Delaware's adult breeders. All breeders and progeny were held over winter in a 23 x 24 m wire-covered pen enclosing a 14 x 15 m pump-fed pool that

contained 20 nesting cylinders. Ducklings raised for release were incubator hatched and were brooded for 24 to 36 hours in a nesting cylinder placed under a heat lamp. Ducklings were raised in small pens until 3 to 4 weeks of age, then transferred either to the breeding pen or to a second similar pen.

Each spring, ducks were placed in holding pens at the Ipswich River Sanctuary and at the Bristol-Blake State Reservation in early March and held until the first week of April before being released. Ducks were released at the other sites in early April without a holding period. Feeding stations were maintained at each site for 2 to 4 weeks following liberation and used the same type of feed hoppers used in the breeding pen.

Cylinders were made from 61 cm lengths of 30 cm diameter galvanized hot-air ducts. The cylinders had ends of 2.5 cm unplaned pine, completely closed at the back and with the top half open at the front. Sloped landing ramps, 15 x 20 cm, were mounted on the front of each cylinder. The structures were erected on angle irons equipped with 91 cm lengths of aluminum downspout sleeves (7.6 cm diameter) which acted as predator guards. Nesting material was pine shavings (Figure 1).

Cylinders were checked every 10 to 14 days during the breeding season. No attempt was made to handle incubating hens in 1973, but hens were nest-trapped thereafter.

Limited bait trapping for banding was done at the Bristol-Blake Reservation, and a combination of bait trapping and airboat night

lighting was used at the Ipswich River Audubon Sanctuary. No attempts were made to capture birds on any other release site.

RESULTS

Releases totaling 219 male and 245 female black ducks were made on 6 areas during 1973-1975 (Table 1). All but 34 birds were released in the spring. The last of the breeding stock and progeny, 11 males and 23 females, was released on the Quabbin Reservation in July 1975. Nest checks, begun in 1973, were continued through 1977. During this period there were 42 nest starts by black ducks of which 36 successful nests produced an estimated 287 ducklings (Table 2). Mallards (Anas platyrhynchos) also used cylinders at the Bristol-Blake Reservation and at the Ipswich River Audubon Sanctuary during this period resulting in 11 nests, of which 8 were successful; 84 ducklings were produced.

Since hens were not nest trapped in 1973 and some escaped capture in later years, we do not know exactly how many different birds nested in cylinders. Based on hens that were nest trapped and their repeat use of certain cylinders, we estimate that at least 27 different black ducks, 11 percent of the females released, used the structures. This is lower than the 16.7 percent usage reported by McGilvrey (1971) and the 20 percent usage observed by Lesser et al (1974). There was circumstantial evidence to indicate that some hens established traditional ground nests. J. McDougall (personal communication) reported that he encountered black ducks that nested in the middle of footpaths at the Ipswich Sanctuary after blacks were released on that area, while Pekkala reported 2 black

duck nests on beaver lodges in the Quabbin Reservation. Heusmann noted in 1974 that a flock of 13 to 16 male black ducks remained in the vicinity of the release site at Bristol-Blake Reservation during the spring, but later in the season were joined by females that had not nested in cylinders. He assumed that these hens had been attending ground nests.

Cylinders were also used by other waterfowl. Five different mallard hens were recorded nesting in cylinders, while wood ducks (Aix sponsa) used cylinders on 3 occasions and hooded mergansers (Mergus cucullatus) used cylinders twice.

Only 2 cylinder nests were destroyed by predators during this study including 1 in which the mallard hen was killed. Four other unsuccessful nests were abandoned due to human disturbance and 3 nests consisted of 1-2 randomly laid eggs. The hatching rate for successful nests was high: 93 percent for black ducks and 98 percent for mallards.

Nineteen of the 219 (8.6%) males were encountered after release. Nine (4%) were reported shot, 7 their first year and 2 their second year. One each was taken in New Brunswick, Quebec, New York and Delaware, all the first season after release. The remainder were harvested locally. Live recoveries included 5 males trapped in their first fall after release, 2 in their second spring, 2 in their second fall and 1 bird in its second winter.

Returns on females were more numerous due to nest trapping recoveries; 32 of 245 (13%) hens were encountered after release. Eleven (4%) were shot, 4 as direct recoveries and 7 the second hunting season

after release. One hen released as an immature was taken that fall in Connecticut; the others were harvested locally. None of the shot birds had been previously bait or nest trapped. No nest trapping was conducted the first year of this study. In later years, 6 hens were nest trapped for the first and only time as first-year releases, 3 were encountered for the last time as 2-year-olds, 2 as 3-year-olds and 1 as a 4-year-old. None of the hens were nest trapped more than twice. In addition to the nest-trapped birds, 3 hens were encountered during banding operations in their first fall and 5 others were trapped in their second year. The most unusual encounter involved an adult hen released in the Quabbin Reservation in July and caught in with a flock of domestic birds 20 km to the south in August.

Many of the released black ducks did not migrate. McDougall (personal communication) reported that some of the released blacks overwintered on open streams on the Ipswich River and Sanctuary and 3 birds were winter trapped at the Parker River National Wildlife Refuge in Newbury. Two of these were retrapped the following summer back at the Ipswich Sanctuary.

Pekkala noted an influx of 100 plus overwintering black ducks on the Swift River behind a state fish hatchery after the releases of black ducks were made on the Quabbin Reservation and at the Swift River Wildlife Management Area in 1975. Previously only 8 to 10 black ducks had wintered on the river. Bristol-Blake Reservation personnel remarked on the number of black ducks that overwintered on that sanctuary where a winter

feeding program for Canada geese (Branta canadensis) was conducted. The scarcity of out-of-state band returns supports our belief that few released black ducks migrated south.

DISCUSSION

This project was considered unsuccessful since there was little evidence that ducklings hatched in cylinders under wild conditions returned to nest in cylinders in subsequent years. Only a single unbanded black duck that may have been cylinder produced was found nesting at the Ipswich Sanctuary. McGilvrey (1971) reported recruitment of young birds to cylinders at Patuxent, but Lesser et al (1974) observed no young birds nesting in cylinders in Delaware. Poor survival of ducklings may have been a factor in the poor recruitment of young birds. McGilvrey (1971) reported few ducklings were raised by first-time mothers, but brood survival was better for experienced hens. We did not conduct brood surveys during this study but the incidental broods we did observe were small, none larger than 4 ducklings.

The use of cylinders by mallards started the second year after the original black duck releases at both the Ipswich Sanctuary and the Bristol-Blake Reservation. Only a single bird was involved at Ipswich but at least 4 different mallards eventually nested at Bristol-Blake. Whether mallards imitated black ducks as suggested by McGilvrey (1971) or merely were demonstrating a normal versatility in utilizing nest sites is unknown.

One possible reason for the low usage of cylinders in this study may have been correlated with their sheet metal construction. Bandy (1965) working primarily with wild mallards in Ohio, reported no usage

of 281 sheet metal cylinders, but 11.8 and 15.5 percent usage rates over a 2-year period for 93 cylinders made of grass and poultry wire. He reported that the inspection of the grass and wire structures by mallards was usually performed from atop the cylinder. We observed that wood ducks usually inspect nest boxes from the top also. Observations of our game farm black ducks revealed that they frequently tried to perch on cylinders but often required several tries before they gained perches on the arched metal roofs. The inability of black ducks to readily use the tops of the structures as an inspection point may have limited their interest in the cylinders. Both McGilvrey (1971) and Lesser et al (1974) covered the tops of their cylinders with split bamboo. The bamboo provided better perches than did metal, though its purpose was protection from sun and rain.

Our cylinders also differed from the other researchers in being closed at one end. We used this style in the hope that the cylinders could be used by wood ducks and hooded mergansers as well as black ducks (Heusmann et al 1977). This did occur. We also had one black duck use a wood duck cylinder despite its smaller entrance and lack of a landing ramp. Bandy (1965) reported that the perches he put on cylinders were not used and were unnecessary. The ducks that did use our cylinders established their clutches in the back of the structure.

Despite the differences in the style of our cylinders, we do not believe that it is possible to develop a self-sustaining population of cylinder-using black ducks by using hand-reared birds. The use of woven wire and grass structures might improve cylinder acceptance, but

maintenance of these structures in the Northeast would be expensive. Bandy (1965) marked ducklings hatched in cylinders but did not retrap any that nested in cylinders as adults. Lesser (personal communication) felt that lack of recruitment in his study was due to poor brood habitat and the broad expanses of open salt march. He thought that recruitment would be better on small fresh water ponds. This study did not bear out that assumption. A possible approach to creating a population of cylinder-using black ducks would be to use breeding stock from the floodplains of the St. John's River, New Brunswick, where tree-nesting black ducks are common (Austin Reed, personal communication) and where there may be a genetic disposition toward utilization of elevated nesting sites.

LITERATURE CITED

Bandy, L. W. 1965. The colonization of artificial nesting structures by wild mallards and black ducks (Anas p. platyrhynchos and A. rubripes tristis). M. S. thesis. Univ. Ohio.

Heusmann, H W, W. W. Blandin and R. E. Turner. 1977. Starling-deterrent nesting cylinders in wood duck management. Wildl. Soc. Bull. 5(1):14-18.

Lesser, C. A., H. L. Alexander and T. Whittendale. 1974. Black duck imprinting and production in Delaware. Trans. N. E. Sect., Wildl. Soc. 31:73-81

McGilvrey, F. B. 1971. Conditioning black ducks to nest in elevated cylinders. Trans. N. E. Sect., Wildl. Sox. 28:213-220.

Table 1. Massachusetts release locations for hand-reared black ducks.

	1973		1974		1975		Total	
	M	F	M	F	M	F	M	F
Ipswich River Sanctuary, Topsfield	15	15	15	13	26	32	56	60
Bristol-Blake Reservation, Norfolk	17	14	23	16	12	12	52	42
Quabbin Reservation,	23	22	17	15	23	40	74	100
New Salem					11	23		
						(July)		
Great Cedar Swamp, Hanson					15	15	15	15
Swift River W.M.A., Belchertown					15	15	15	15
Ayer Game Farm, Ayer	—	—	—	—	7	13	7	13
Totals	55	51	55	44	109	150	219	245

Table 2. Black duck usage of cylinders on Massachusetts release sites.

	Number of Nest Starts					Number Successful					Number Ducklings Produced				
Area	73	74	75	76	77	73	74	75	76	77	73	74	75	76	77
Ipswich River Sanctuary, Topsfield	2	3	2	1	2	2	3	2	0	2	8	20*	19	0	22*
Bristol-Blake State Reservation, Norfolk	3	4	3	2	0	3	3	3	2	0	21	27	25	21	0
Quabbin Reservation, New Salem	2	3	5	3	1	2	3	2	2	1	12*	16*	15	20	10
Great Cedar Swamp, Hanson	-	-	0	0	0	-	-	0	0	0	-	-	0	0	0
Swift River W.M.A., Belchertown	-	-	3	0	0	-	-	3	0	0	-	-	18	0	0
Ayer Game Farm, Ayer	-	-	3	0	0	-	-	3	0	0	-	-	33	0	0
	7	10	16	6	3	7	9	13	4	3	41	63	110	41	32

*Estimate

Figure 1. Black duck nesting cylinder on angle iron with sleeve predator guard.

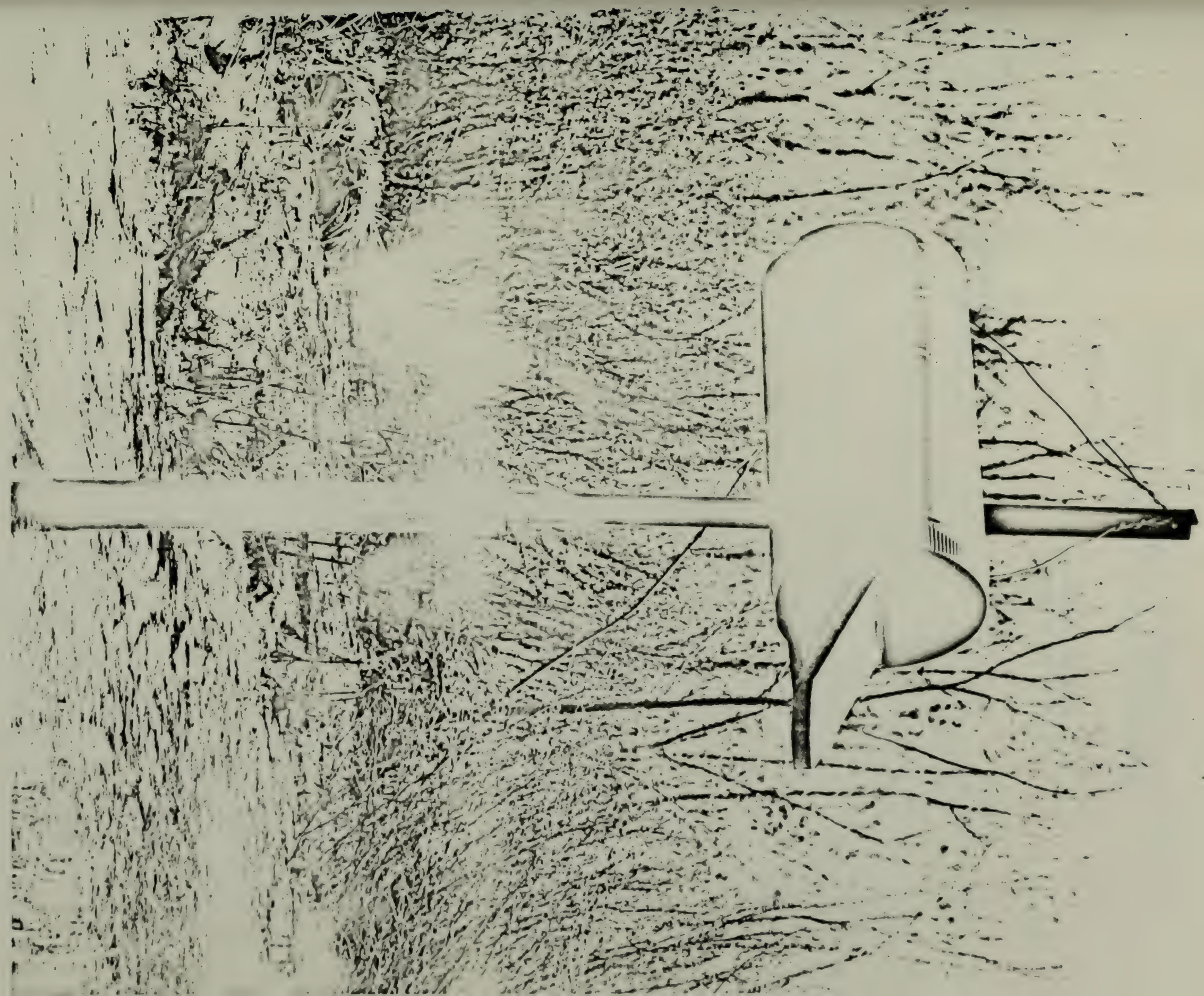

Final Report
W-42-R:VII-1

Submitted by:

MASSACHUSETTS DIVISION OF FISHERIES AND WILDLIFE
Bureau of Wildlife Research and Management

Approved: _____
Richard Cronin
Superintendent

Prepared by: _____
H W Heusmann
Waterfowl Biologist

Date: _____